INSTALLATION AND OPERATION MANUAL

2300

(OB02302 model)

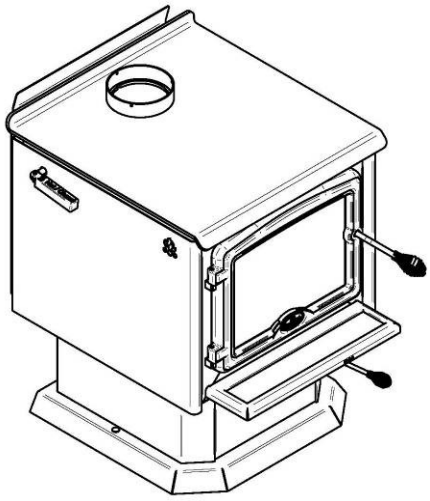

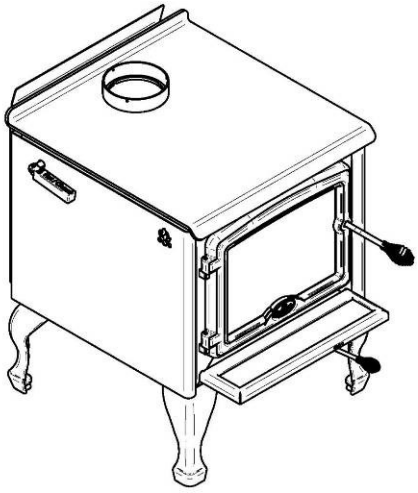

US ENVIRONMENTAL PROTECTION AGENCY PHASE II CERTIFIED WOOD STOVE

Safety tested according to ULC S627 and UL 1482 Standards by an accredited laboratory

This appliances is EPA ≤ 4.5 g/h & Washington State Certified

www.osburn-mfg.com

Stove Builder International Inc.

250, rue de Copenhague, St-Augustin-de-Desmaures (Quebec) Canada G3A 2H3

Technical services: 1-877-356-6663 E-mail: tech@sbi-international.com

This manual is available for free download on the manufacturer's web site. It is a copyrighted document. Re-sale is strictly prohibited. The manufacturer may update this manual from time to time and cannot be responsible for problems, injuries, or damages arising out of the use of information contained in any manual obtained from unauthorized sources.

READ AND KEEP THIS MANUAL FOR REFERENCE

45800A

Printed in Canada 2024-12-04

THANK YOU FOR CHOOSING THIS OSBURN WOOD STOVE

As one of North America's largest and most respected wood stove and fireplace manufacturers, Stove Builder International takes pride in the quality and performance of all its products. We want to help you get maximum satisfaction as you use this product.

In the pages that follow you will find general advice on wood heating, detailed instructions for safe and effective installation, and guidance on how to get the best performance from this stove as you build and maintain fires and maintain your wood heating system.

We recommend that our wood burning hearth products be installed and serviced by professionals who are certified in the United States by NFI (National Fireplace Institute®) or in Canada by WETT (Wood Energy Technology Transfer) or in Quebec by APC (Association des Professionnels du Chauffage).

Congratulations on making a wise purchase.

When this stove is not properly installed, a house fire may result. To reduce the risk of fire, follow the installation instructions. Contact local building or fire officials about restrictions and installation inspection requirements in your area.

Please read this entire manual before you install and use your new stove. Failure to follow instructions may result in property damage, bodily injury, or even death. It is important that you follow the installations guidelines exactly.

You may need to obtain a building permit for the installation of this stove and the chimney that it is connected to. Consult your municipal building department or fire department before installation to determine the need to obtain one. We recommend that you also inform your home insurance company to find out if the installation will affect your policy.

REGISTER YOUR WARRANTY ONLINE

To receive full warranty coverage, you will need to show evidence of the date you purchased your stove. Keep your sales invoice. We also recommend that you register your warranty online at:
http://www.osburn-mfg.com/en/service-support/warranty-registration

Registering your warranty online will help us to quickly track the information we need about your stove.

Table of content

PART A - OPERATION AND MAINTENANCE 6
1 Safety Information 6
2 General Information on Osburn 2300 (OB02302).....7
2.1 Appliance performance(1) 7
2.2 General Features 8
2.3 Zone Heating and How to Make it Work for You 11
2.4 The Benefits of Low Emissions and High Efficiency.....11
2.5 The SBI Commitment to You and the Environment 12
2.5.1 What is Your New Stove Made Of?.....12
3 Fuel 13
3.1 Materials That Should Not be Burned.....13
3.2 How to Prepare or Buy Good Firewood 13
3.2.1 What is Good Firewood? 13
3.2.2 Tree Species 13
3.2.3 Log Length.....14
3.2.4 Piece Size.....14
3.2.5 How to Dry Firewood.....15
3.2.6 Judging Firewood Moisture Content 16
3.3 Manufactured Logs.....16
4 Operating Your Stove 17
4.1 Your First Fires 17
4.2 Lighting Fires.....17
4.2.1 Conventional Fire Starting 17
4.2.2 The Top Down Fire 18
4.2.3 Two Parallel Logs.....18
4.2.4 Using Fire Starters.....18
4.3 Maintaining Wood Fires 18
4.3.1 General Advice 18
4.3.2 Ash Removal.....19
4.3.3 Raking Charcoal.....19
4.3.4 Firing Each New Load Hot 20
4.3.5 Turning Down the Air Supply 20
4.3.6 Use of the bypass damper 21
4.3.7 Building Different Fires for Different Needs 22

5 Maintaining Your Wood Heating System 24

5.1 Stove Maintenance 24

5.1.1 Plated Finish Maintenance 24

5.1.2 Cleaning Door Glass 24

5.1.3 Door adjustment 25

5.1.4 Replacing the Door Gasket 25

5.1.5 Replacing the Glass Gasket and/or the Glass 26

5.1.6 Cleaning and Painting the Stove 27

5.2 Chimney and Chimney Connector Maintenance 27

5.2.1 Why Chimney Cleaning is Necessary 27

5.2.2 How Often Should You Clean the Chimney? 27

5.2.3 Cleaning the Chimney 28

PART B - INSTALLATION 29

6 Safety Information 29

6.1 Summary of Installation Cautions and Warnings 29

6.2 Regulations Covering Stove Installation 29

7 Clearances to Combustible Material 30

7.1 Location of the certification label 30

7.2 Clearances to Walls and Ceiling 30

7.3 Floor protector 33

7.4 Reducing Wall and Ceiling Clearances Safely 34

7.4.1 Shield Construction Rules 34

7.4.2 Table of Clearance Reduction Percentages 36

8 The Venting System 37

8.1 General 37

8.2 Suitable Chimneys 37

8.2.1 Factory-built Metal Chimneys 37

8.2.2 Factory-built Metal Chimneys in mobile homes 39

8.2.3 Masonry Chimneys 39

8.3 Minimum Chimney Height 40

8.4 The Relationship Between the Chimney and the House 40

8.4.1 Why inside chimneys are preferred 40

8.4.2 Why the chimney should penetrate the highest heated space 41

8.5 Supply of Combustion Air 41

8.5.1 Combustion Air Supply in Mobile Homes 42

8.5.2 Air Supply in Conventional Houses 42
8.6 Installing the Chimney Connector 42
8.6.1 Installation of Single Wall Chimney Connector 43
Appendix 1: Top Bricks Installation....45
Appendix 2: Installation of the Bypass Damper Handle Holder 46
Appendix 3: Installing the Optional Legs or Pedestal....47
Appendix 4: Installing the Optional Door Overlay....50
Appendix 5: Installing the Optional Fresh Air Intake Kit (AC01336, AC01381) 51
Appendix 6: Installation and Use of Blower and Optional Thermodiscs....52
Appendix 7: Installation of Secondary Air Tubes and Baffle ...54
Appendix 8: Exploded Diagram and Parts List....56
OSBURN LIMITED LIFETIME WARRANTY 59

PART A - OPERATION AND MAINTENANCE

Please see Part B for installation instructions.

1 SAFETY INFORMATION

- **HOT WHILE IN OPERATION, KEEP CHILDREN, CLOTHING AND FURNITURE AWAY. CONTACT MAY CAUSE SKIN BURNS. GLOVES MAY BE NEEDED FOR STOVE AND BYPASS DAMPER OPERATION.**
- **USING A STOVE WITH CRACKED OR BROKEN COMPONENTS, SUCH AS GLASS OR FIREBRICKS OR BAFFLES MAY PRODUCE AN UNSAFE CONDITION AND MAY DAMAGE THE STOVE.**
- **OPEN THE AIR CONTROL FULLY BEFORE OPENING FIRING DOOR.**
- **THIS STOVE IS NOT DESIGNED TO BE USED WITH THE DOOR OPEN. THE DOOR MAY BE OPEN ONLY DURING LIGHTING PROCEDURES OR RELOADING. DO NOT LEAVE THE STOVE UNATTENDED WHEN THE DOOR IS SLIGHTLY OPENED DURING IGNITION. ALWAYS CLOSE THE DOOR AFTER IGNITION.**
- **NEVER USE GASOLINE, GASOLINE-TYPE LANTERN FUEL (NAPHTHA), FUEL OIL, MOTOR OIL, KEROSENE, CHARCOAL LIGHTER FLUID, OR SIMILAR LIQUIDS OR AEROSOLS TO START OR 'FRESHEN UP' A FIRE IN THIS STOVE. KEEP ALL SUCH LIQUIDS OR AEROSOLS WELL AWAY FROM THE STOVE WHILE IT IS IN USE.**
- **DO NOT STORE FUEL WITHIN HEATER MINIMUM INSTALLATION CLEARANCES.**
- **BURN ONLY SEASONED NATURAL FIREWOOD.**
- **DO NOT BURN:**
    - **GARBAGE OF ANY KIND,**
    - **COAL OR CHARCOAL,**
    - **TREATED, PAINTED OR COATED WOOD,**
    - **PLYWOOD OR PARTICLE BOARD,**
    - **FINE PAPER, COLORED PAPER OR CARDBOARD,**
    - **SALTWATER DRIFTWOOD, OR**
    - **RAILROAD TIES.**

- **DO NOT ELEVATE THE FIRE BY USING A GRATE IN THIS STOVE.**
- **THIS APPLIANCE SHOULD BE MAINTAINED AND OPERATED AT ALL TIMES IN ACCORDANCE WITH THESE INSTRUCTIONS.**



WARNING: This product can expose you to chemicals including carbon monoxide, which is known to the State of California to cause cancer, birth defects or other reproductive harm. For more information go to www.P65warnings.ca.gov/

2 GENERAL INFORMATION ON OSBURN 2300 (OB02302)

2.1 APPLIANCE PERFORMANCE(1)

Fuel type	Dry cordwood	
Recommended heating area[*]	900 to 2,300 ft^2 (84 to 214 m^2)	
Firebox volume	3.4 ft^3 (0.096 m^3)	
Maximum burn time[*]	10 h	
Maximum heat output(2) (dry cordwood)	90,000 BTU/h (26.4 kW)	
Overall heat output rate (min. to max.)(2)(3)	11,700 BTU/h to 26,400 BTU/h (3.4 kW to 7.7 kW)	
Average overall efficiency(3) - EPA Cribs / Douglas Fir	67.5% (HHV(4))	72.9% (LHV(5))
Average overall efficiency(3) - Dry cordwood	To come% (HHV(4))	To come % (LHV(5))
Optimum efficiency(2)(6)	75%	
Average particulate emissions rate(7)	4.5 g/h (EPA / CSA B415.1-10)	
Average CO(8)	165.6 g/h	

[*] Recommended heating area and maximum burn time may vary subject to location in home, chimney draft, heat loss factors, climate, fuel type and other variables. The recommended heated area for a given appliance is defined by the manufacturer as its capacity to maintain a minimum acceptable temperature in the designated area in case of a power failure.

(1) Values are as measured per test method, except for the recommended heating area, firebox volume, maximum burn time and maximum heat output.

(2) The maximum heat output (dry cordwood) is based on a loading density varying between 15 lb/ft^3 and 20 lb/ft^3. Other performances are based on a fuel load prescribed by the standard. The specified loading density varies between 7 lb/ft^3 and 12 lb/ft^3. The moisture content is between 19% and 25%.

(3) As measured per CSA B415.1-10 stack loss method.

(4) Higher Heating Value of the fuel.

(5) Lower Heating Value of the fuel.

(6) Optimum overall efficiency at a specific burn rate (LHV).

(7) This appliance is officially tested and certified by an independent agency.

(8) Carbon monoxide.

2.2 GENERAL FEATURES

Maximum log length	20 in (508 mm) north-south*
Flue outlet diameter	6 in (152 mm)
Recommended connector pipe diameter	6 in (152 mm)
Type of chimney	CAN/ULC S629, UL 103 HT (2100 °F)
Baffle material	C-Cast
Approved for alcove installation	Not approved
Approved for mobile home installation‡	Yes
Shipping weight (without option)	450 lb (204 kg)
Appliance weight (model with legs)	441 lb (200 kg)
Appliance weight (model with pedestal)	437 lb (198 kg)
Type of door	Single, glass with cast iron frame
Type of glass	Ceramic glass
Blower	Included (up to 100 CFM)
Particulate emission standard	EPA / CSA B415.1-10
USA standard (safety)	UL 1482
Canadian standard (safety)	ULC S627

** *East-west: through the door you see the longitudinal sides of the logs; north-south: through the door you see the tips of the logs.*

‡ *Mobile home (Canada) or manufactured home (USA): The US department of Housing and Urban Development describes "manufactured homes" better known as "mobile homes" as followed; buildings built on fixed wheels and those transported on temporary wheels/axles and set on a permanent foundation. In Canada, a mobile home is a dwelling for which the manufacture and assembly of each component is completed or substantially completed prior to being moved to a site for installation on a foundation and connection to service facilities and which conforms to the CAN/CSA-Z240 MH standard.*

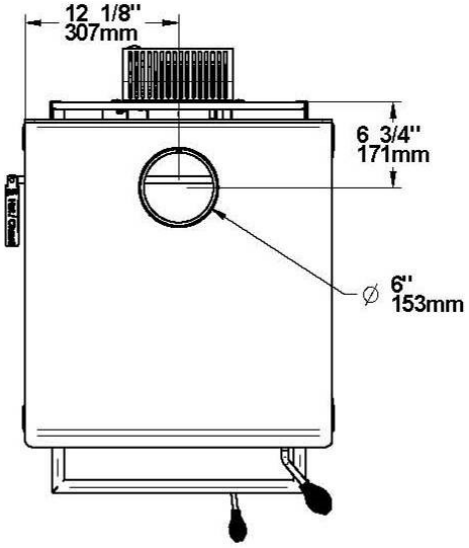
12 1/8"
307mm
6 3/4"
171mm
Ø 6"
153mm

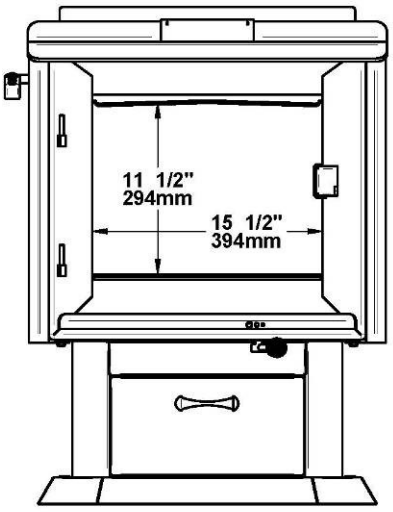
11 1/2"
294mm
15 1/2"
394mm

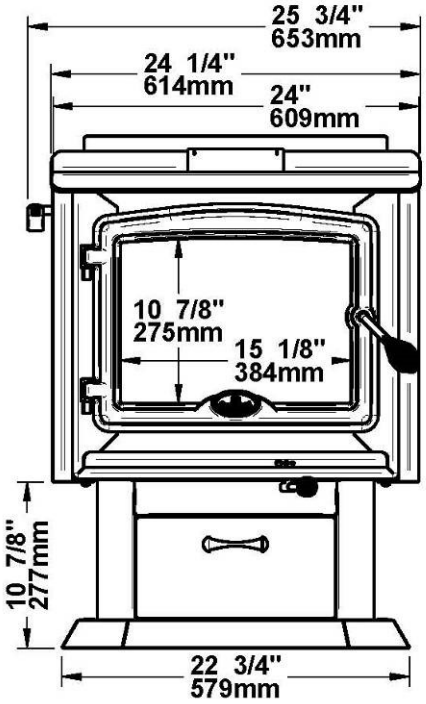
25 3/4"
653mm
24 1/4"
614mm
24"
609mm
10 7/8"
275mm
15 1/8"
384mm
10 7/8"
277mm
22 3/4"
579mm

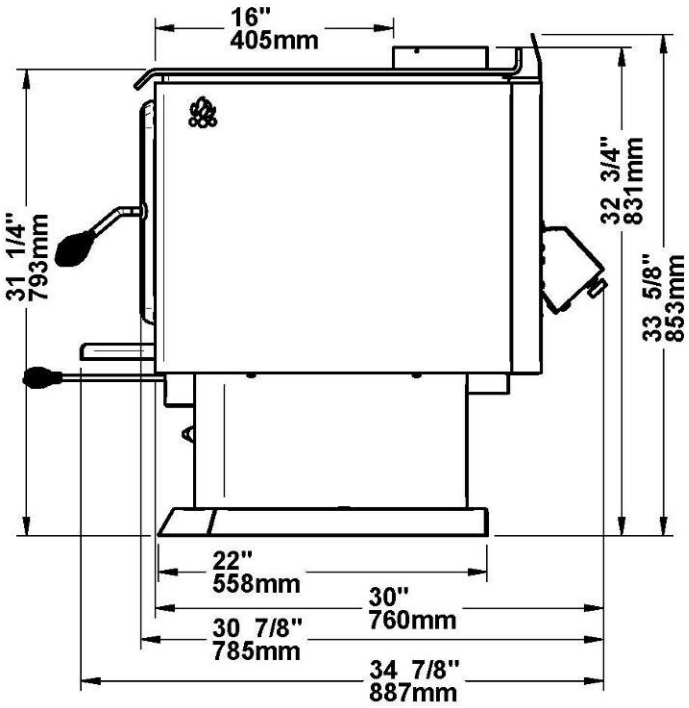
16"
405mm
31 1/4"
793mm
32 3/4"
831mm
33 5/8"
853mm
22"
558mm
30"
760mm
30 7/8"
785mm
34 7/8"
887mm

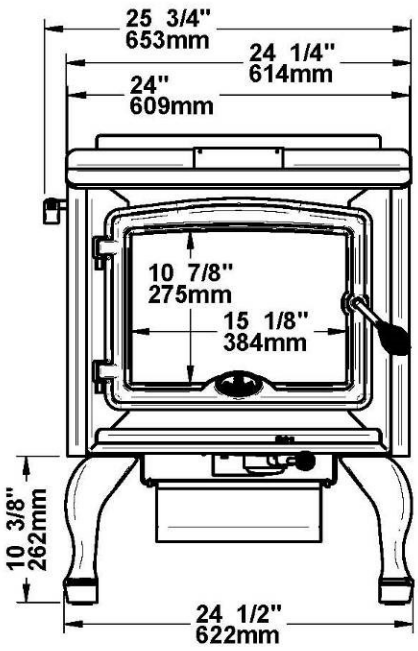
25 3/4"
653mm
24 1/4"
614mm
24"
609mm
10 7/8"
275mm
15 1/8"
384mm
10 3/8"
262mm
24 1/2"
622mm

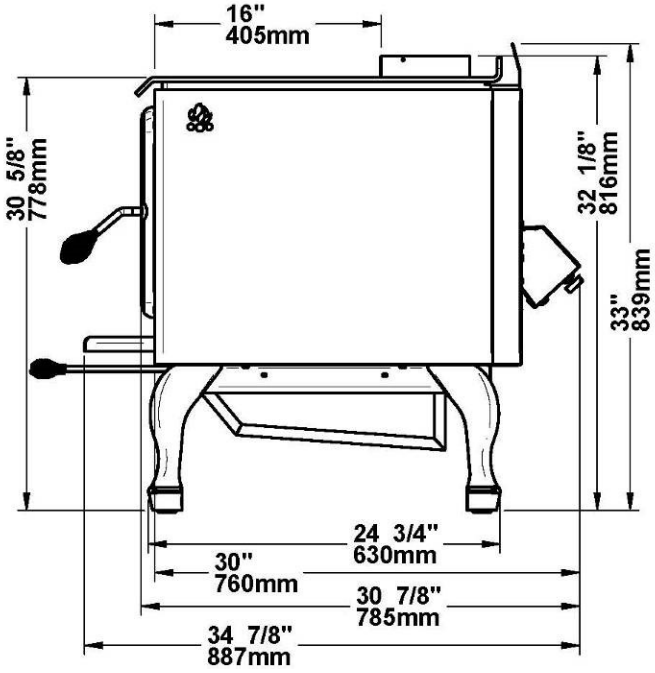
16"
405mm
30 5/8"
778mm
32 1/8"
816mm
33"
839mm
24 3/4"
630mm
30"
760mm
30 7/8"
785mm
34 7/8"
887mm

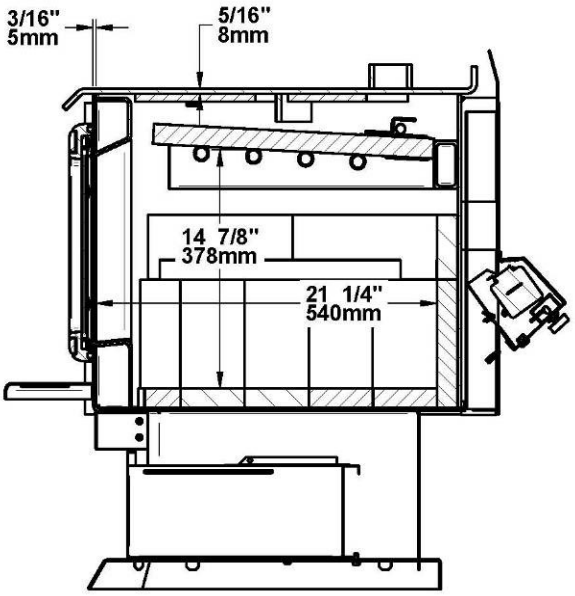
3/16"
5mm
5/16"
8mm
14 7/8"
378mm
21 1/4"
540mm

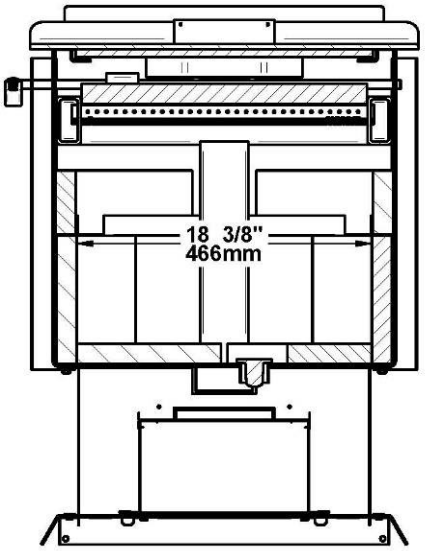
18 3/8"
466mm

2.3 ZONE HEATING AND HOW TO MAKE IT WORK FOR YOU

Your new Osburn 2300 wood stove is a space heater, which means it is intended to heat the area it is installed in, as well as spaces that connect to that area, although to a lower temperature. This is called zone heating and it is an increasingly popular way to heat homes or spaces within homes.

Zone heating can be used to supplement another heating system by heating a particular space within a home, such as a basement family room or an addition that lacks another heat source.

Houses of moderate size and relatively new construction can be heated with a properly sized and located wood stove. Whole house zone heating works best when the stove is located in the part of the house where the family spends most of its time. This is normally the main living area where the kitchen, dining and living rooms are located. By locating the stove in this area, you will get the maximum benefit of the heat it produces and will achieve the highest possible heating efficiency and comfort. The space where you spend most of your time will be warmest, while bedrooms and basement (if there is one) will stay cooler. In this way, you will burn less wood than with other forms of heating.

Although the stove may be able to heat the main living areas of your house to an adequate temperature, we strongly recommend that you also have a conventional oil, gas or electric heating system to provide backup heating.

Your success with zone heating will depend on several factors, including the correct sizing and location of the stove, the size, layout and age of your home and your climate zone. Three-season vacation homes can usually be heated with smaller stoves than houses that are heated all winter.

2.4 THE BENEFITS OF LOW EMISSIONS AND HIGH EFFICIENCY

The low smoke emissions produced by the special features inside the Osburn 2300 firebox mean that your household will release up to 90 percent less smoke into the outside environment than if you used an older conventional stove. But there is more to the emission control technologies than protecting the environment.

The smoke released from wood when it is heated contains about half of the energy content of the fuel. By burning the wood completely, your stove releases all the heat energy from the wood instead of wasting it as smoke up the chimney. Also, the features inside the firebox allow you to reduce the air supply to control heat output, while maintaining clean and efficient flaming combustion, which boosts the efficient delivery of heat to your home.

The emission control and advanced combustion features of your stove can only work properly if your fuel is in the correct moisture content range of 15 to 20 percent. See Section 3 of this manual for suggestions on preparing fuelwood and judging its moisture.

2.5 THE SBI COMMITMENT TO YOU AND THE ENVIRONMENT

The SBI team are committed to protecting the environment, so we do everything we can to use only materials in our products that will have no lasting negative impact on the environment.

2.5.1 WHAT IS YOUR NEW STOVE MADE OF?

The body of your stove, which is most of its weight, is carbon steel. Should it ever become necessary many years in the future, almost the entire stove can be recycled into new products, thus eliminating the need to mine new materials.

The paint coat on your stove is very thin. Its VOC content (Volatile Organic Components) is very low. VOCs can be responsible for smog, so all the paint used during the manufacturing process meets the latest air quality requirements with regards to VOC reduction or elimination.

The air tubes are stainless steel, which can also be recycled.

The C-Cast baffle is made of an aluminosilicate fibre material that is compressed with a binder to form a rigid board. C-Cast can withstand temperatures above 2,000 °F. It is not considered hazardous waste. Disposal at a landfill is recommended.

Firebrick is mainly composed of silicon dioxide, also known as silica, an earth derived product. It is most commonly found in nature in the form of sand and clay. Disposal at a landfill is recommended.

The door and glass gaskets are fibreglass which is spun from melted sand. Black gaskets have been dipped into a solvent-free solution. Disposal at a landfill is recommended.

The door glass is a 4 mm thick ceramic material that contains no toxic chemicals. It is basically made of raw earth materials such as sand and quartz that are combined in such a way to form a glass at high temperatures. Ceramic glass will not re-melt in the same way as normal glass, so it should not be recycled with your regular household products. Disposal at a landfill is recommended.

3 FUEL

3.1 MATERIALS THAT SHOULD NOT BE BURNED

- **GARBAGE OF ANY KIND,**
- **COAL OR CHARCOAL,**
- **TREATED, PAINTED OR COATED WOOD,**
- **PLYWOOD OR PARTICLE BOARD,**
- **FINE PAPER, COLORED PAPER OR CARDBOARD,**
- **SALT WATER DRIFTWOOD,**
- **MANUFACTURED LOGS CONTAINING WAX OR CHEMICAL ADDITIVES,**
- **RAILROAD TIES,**
- **LIQUIDS SUCH AS KEROSCENE OR DIESEL FUEL TO START A FIRE.**

3.2 HOW TO PREPARE OR BUY GOOD FIREWOOD

3.2.1 WHAT IS GOOD FIREWOOD?

Good firewood has been cut to the correct length for the stove, split to a range of sizes and stacked in the open until its moisture content is reduced to 15 to 20 per cent.

3.2.2 TREE SPECIES

The tree species the firewood is produced from is less important than its moisture content. The main difference in firewood from various tree species is the density of the wood. Hardwoods are denser than softwoods. People who live in the coldest regions of North America usually have only spruce, birch and poplar, other low-density species to burn and yet they can heat their homes successfully.

Homeowners with access to both hardwood and softwood fuel sometimes use both types for different purposes. For example, softer woods make good fuel for relatively mild weather in spring and fall because they light quickly and produce less heat Softwoods are not as dense as hardwoods so a given volume of wood contains less energy. Using softwoods avoids overheating the house, which can be a common problem with wood heating in moderate weather. Harder woods are best for colder winter weather when more heat and longer burn cycles are desirable.

Note that hardwood trees like oak, maple, ash and beech are slower growing and longer lived than softer woods like poplar and birch. That makes hardwood trees more valuable. The advice that only hardwoods are good to burn is outdated. Old, leaky cast iron stoves wouldn't hold a fire overnight unless they were fed large pieces of hardwood. That is no longer true. You can successfully heat your home by using the less desirable tree species and give the forest a break at the same time.

3.2.3 LOG LENGTH

Logs should be cut about 1” (25 mm) shorter than the firebox so they fit in easily. Pieces that are even slightly too long make loading the stove very difficult. The most common standard length of firewood is 16” (400 mm).

The pieces should be a consistent length, with a maximum of 1” (25 mm) variation from piece to piece.

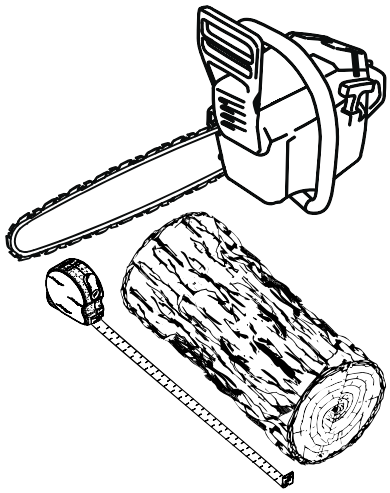

3.2.4 PIECE SIZE

Firewood dries more quickly when it is split. Large unsplit rounds can take years to dry enough to burn. Even when dried, unsplit logs are difficult to ignite because they don’t have the sharp edges where the flames first catch. Logs as small as 3” (75 mm) should be split to encourage drying.

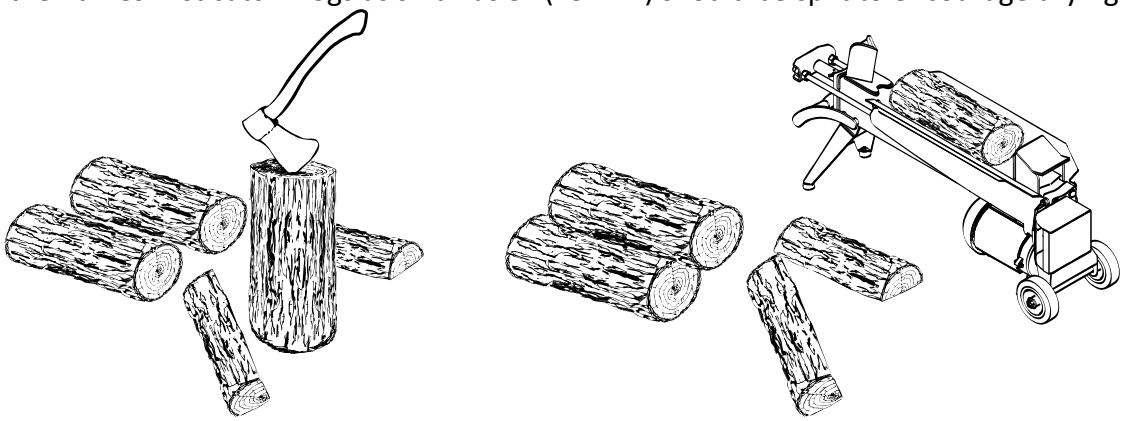

Wood should be split to a range of sizes, from about 3” to 6” (75 mm to 150 mm) in cross section. Having a range of sizes makes starting and rekindling fires much easier. Often, the firewood purchased from commercial suppliers is not split finely enough for convenient stoking. It is sometimes advisable to resplit the wood before stacking to dry.

3.2.5 HOW TO DRY FIREWOOD

Firewood that is not dry enough to burn is the cause of most complaints about wood inserts. Continually burning green or unseasoned wood produces more creosote and involves lack of heat and dirty glass door. See **Section 5:** ***Maintaining your wood heating system*** for concerns about creosote.

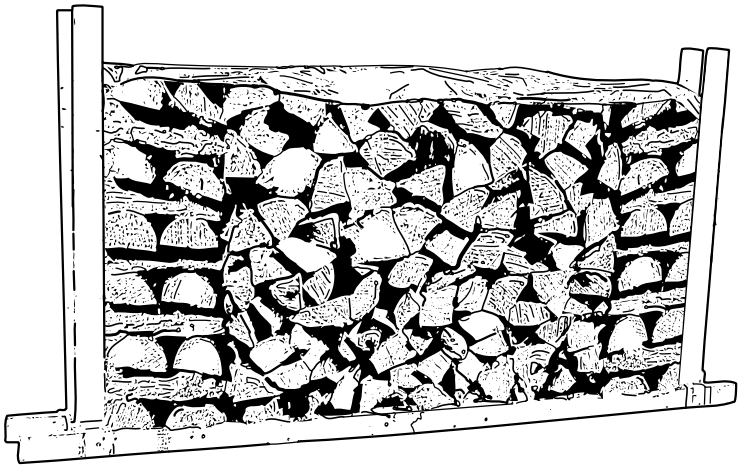

Here are some things to consider in estimating drying time:

- firewood takes a long time to dry
- firewood bought from a dealer is rarely dry enough to burn, so it is advisable to buy the wood in spring and dry it yourself
- drying happens faster in dry weather than in damp, maritime climates
- drying happens faster in warm summer weather than in winter weather
- small pieces dry more quickly than large pieces
- split pieces dry more quickly than unsplit rounds
- softwoods take less time to dry than hardwoods
- softwoods like pine, spruce, and poplar/aspen can be dry enough to burn after being stacked in the open for only the summer months
- hardwoods like oak, maple and ash can take one, or even two years to dry fully, especially if the pieces are big
- firewood dries more quickly when stacked in the open where it is exposed to sun and wind; it takes much longer to dry when stacked in a woodshed
- firewood that is ready to burn has a moisture content between 15 and 20% by weight and will allow your stove to produce its highest possible efficiency

3.2.6 JUDGING FIREWOOD MOISTURE CONTENT

You can find out if some firewood is dry enough to burn by using these guidelines:

- cracks form at the ends of logs as they dry
- as it dries in the sun, the wood turns from white or cream coloured to grey or yellow,
- bang two pieces of wood together; seasoned wood sounds hollow and wet wood sounds dull,
- dry wood is much lighter in weight than wet wood,
- split a piece, and if the fresh face feels warm and dry it is dry enough to burn; if it feels damp, it is too wet,
- burn a piece; wet wood hisses and sizzles in the fire and dry wood does not.

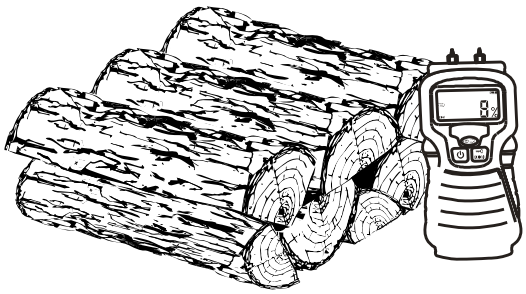

You could buy a wood moisture meter to test your firewood.

3.3 MANUFACTURED LOGS

Do not burn manufactured logs made of wax impregnated sawdust or logs with any chemical additives. Manufactured logs made of 100% compressed sawdust can be burned but be careful burning too much of these logs at the same time. Start with one manufactured log and see how the stove reacts. You can increase the number of logs burned at a time to making sure the temperature never rises higher than 475 °F (246 °C) on a magnetic thermometer for installation on single wall stove pipes or 900 °F (482 °C) on a probe thermometer for installation on double wall stove pipe. The thermometer should be placed about 18” (457 mm) above the stove. Higher temperatures can lead to overheat and damage your stove.

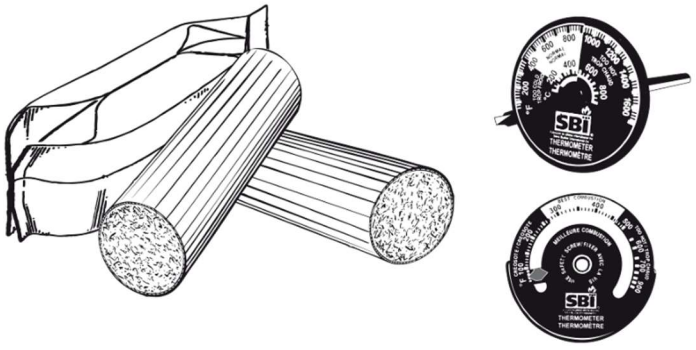

4 OPERATING YOUR STOVE

4.1 YOUR FIRST FIRES

Two things will happen as you burn your first few fires; the paint cures and the internal components of the stove are conditioned.

As the paint cures, some of the chemicals vaporize. The vapors are not poisonous, but they do smell bad. Fresh paint fumes can also cause false alarms in smoke detectors. So, when you first light your stove, be prepared by opening doors and/or windows to ventilate the house. As you burn hotter and hotter fires, more of the painted surfaces reach the curing temperature of the paint. The smell of curing paint does not disappear until you have burned one or two very hot fires.

Burn one or two small fires to begin the curing and conditioning process. Then build bigger and hotter fires until there is no longer any paint smell from the stove. Once the paint smell disappears, your stove is ready for serious heating.

4.2 LIGHTING FIRES

Each person who heats with wood develops their own favorite way to light fires. Whatever method you choose, your goal should be to get a hot fire burning quickly. A fire that starts fast produces less smoke and deposits less creosote in the chimney. Here are three popular and effective ways to start wood fires.

4.2.1 CONVENTIONAL FIRE STARTING

The conventional way to build a wood fire is to bunch up 5 to 10 sheets of plain newspaper and place them in the firebox. Next, place 10 or so pieces of fine kindling on the newspaper. This kindling should be very thin; less than 1" (25 mm). Next, place some larger kindling pieces on the fine kindling. Open the air control fully and light the newspaper. If you have a tall, straight venting system you should be able to close the door immediately and the fire will ignite. If your venting system has elbows or an outside chimney, you may need to leave the door closed but unlatched for a few minutes as the newspaper ignites and heat in the chimney produces some draft. Once the fire has ignited, close the door and leave the air control fully open.

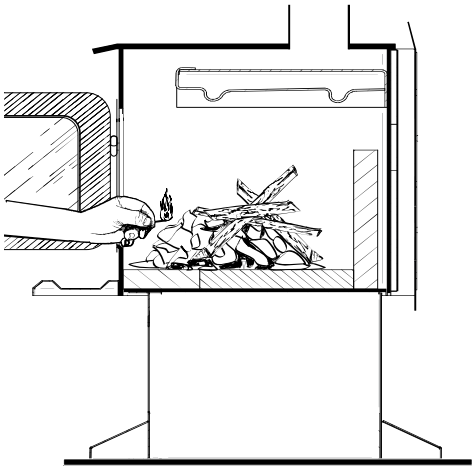

A conventional kindling fire with paper under finely split wood.

DO NOT LEAVE THE STOVE UNATTENDED WHEN THE DOOR IS SLIGHTLY OPENED DURING IGNITION. ALWAYS CLOSE THE DOOR AFTER IGNITION.

After the kindling fire has mostly burned, you can add standard firewood pieces until you have a fire of the right size for the conditions.

4.2.2 THE TOP-DOWN FIRE

The top-down fire-starting method solves two problems with the conventional method: first, it does not collapse and smother itself as it burns; and second, it is not necessary to build up the fire gradually because the firebox is loaded before the fire is lit. A top-down fire can provide up to two hours of heating or more. The top-down method only works properly if the wood is well-seasoned.

Start by placing three or four full-sized split pieces of dry firewood in the firebox. Next, place 4 or 5 more finely split pieces of firewood (2" to 3" [50 mm to 75 mm] in dia.) on the base logs at right angles (log cabin style). Now place about 10 pieces of finely split kindling on the second layer at right angles.

The fire is topped with about 5 sheets of newspaper. You can just bunch them up and stuff them in between the kindling and the underside of the baffle. Or you can make newspaper knots by rolling up single sheets corner to corner and tying a knot in them. The advantage of knots is that they don't roll off the fire as they burn. Light the newspaper and watch as the fire burns from top to bottom.

4.2.3 TWO PARALLEL LOGS

Place two spit logs in the firebox. Place a few sheets of twisted newspaper between the logs. Now place some fine kindling across the two logs and some larger kindling across those, log cabin style. Light the newspaper.

4.2.4 USING FIRE STARTERS

Many people like to use commercial fire starters instead of newspaper. Some of these starters are made of sawdust and wax and others are specialized flammable solid chemicals. Follow the package directions for use.

Gel starter may be used but only if there are no hot embers present. Use only in a cold firebox to start a fire.

DO NOT USE FLAMMABLE LIQUIDS SUCH AS GASOLINE, NAPHTHA, FUEL OIL, MOTOR OIL, OR AEROSOLS TO START OR REKINDLE THE FIRE.

4.3 MAINTAINING WOOD FIRES

4.3.1 GENERAL ADVICE

Wood heating with a space heater is very different than other forms of heating. There will be variations in the temperature in different parts of the house and there will be variations in temperature throughout the day and night. This is normal, and for experienced wood burners these are advantages of zone heating with wood.

Do not expect steady heat output from your stove. It is normal for its surface temperature to rise after a new load of wood is ignited and for its temperature to gradually decline as the fire progresses. This rising and falling of temperature can be matched to your household routines. For example, the area temperature can be cooler when you are active, such as when doing housework or cooking, and it can be warmer when you are inactive, such as when reading or watching television.

Wood burns best in cycles. A cycle starts when a new load of wood is ignited by hot coals and ends when that load has been consumed down to a bed of charcoal about the same size as it was when the wood was loaded. Do not attempt to produce a steady heat output by placing a single log on the fire at regular intervals. Always place at least three, and preferably more, pieces on the fire at a time so that the heat radiated from one piece helps to ignite the pieces next to it. Each load of wood should provide several hours of heating. The size of each load can be matched to the amount of heat needed.

When you burn in cycles, you rarely need to open the stove's loading door while the wood is flaming. This is an advantage because there is more chance that smoke will leak from the stove when the door is opened as a full fire is burning. This is especially true if the chimney connector has 90 ° elbows and if the chimney runs up the outside wall of the house.

IF YOU MUST OPEN THE DOOR WHILE THE FUEL IS FLAMING, OPEN THE AIR CONTROL FULLY FOR A FEW MINUTES, THEN UNLATCH AND OPEN THE DOOR SLOWLY.

4.3.2 ASH REMOVAL

Ash should be removed from the firebox every two or three days of full time heating. Do not let the ash build up in the firebox because it will interfere with proper fire management.

The best time to remove ash is after an overnight fire when the stove is relatively cool, but there is still some chimney draft to draw the ash dust into the stove and prevent it from coming into the room.

After ashes have been removed from the stove and placed in a tightly covered metal container, they should be taken outside immediately. The closed container of ashes should be placed on a non-combustible floor or on the ground well away from all combustible materials pending final disposal. Ashes normally contain some live charcoal that can stay hot for several days. If the ashes are disposed of by burial in soil or otherwise locally dispersed, they should be retained in the closed container until all cinders have thoroughly cooled. Other waste shall not be placed in this container.

NEVER STORE ASHES INDOORS OR IN A NON-METALIC CONTAINER OR ON A WOODEN DECK.

DO NOT OVERFIRE.

4.3.3 RAKING CHARCOAL

Rekindle the fire when you notice that the room temperature has fallen. You will find most of the remaining charcoal at the back of the firebox, furthest from the door. Rake these coals towards the door before loading. There are two reasons for this raking of the coals. First, it concentrates them near where most of the combustion air enters the firebox and where they can ignite the new load quickly, and second, the charcoal will not be smothered by the new load of wood. If you were to simply spread the charcoal out, the new load will smoulder for a long time before igniting.

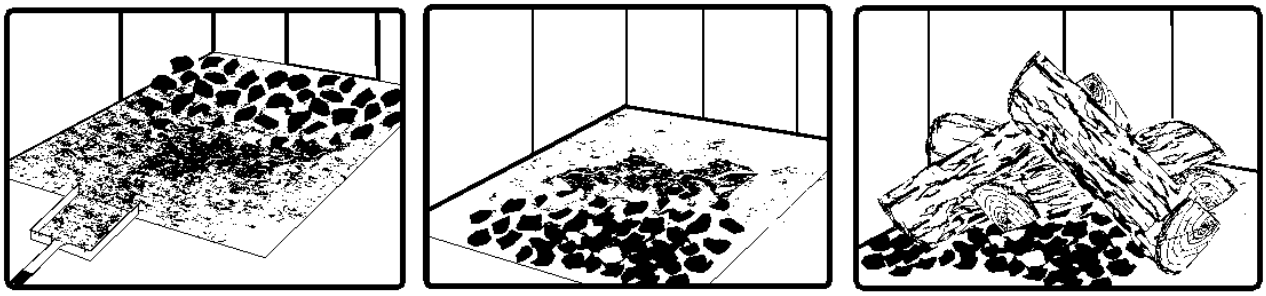

Remove ash first, and then rake charcoal towards the front of the firebox before loading so that it will ignite the new load.

4.3.4 FIRING EACH NEW LOAD HOT

Place the new load of wood on and behind the charcoal, and not too close to the glass. Close the door and open the air control fully. Leave the air control fully open until the firebox is full of flames, the wood has charred to black and its edges are glowing red. Firing each load of wood hot accomplishes a few things:

- drives the surface moisture from the wood,
- creates a layer of char on the wood, which slows down its release of smoke,
- heats the firebox components so they reflect heat back to the fire, and
- heats the chimney so it can produce strong, steady draft for the rest of the cycle.

Although it is important to fire each new load hot to prepare for a clean burn, do not allow the fire to burn at full intensity for more than a few minutes.

DO NOT LEAVE THE STOVE UNATTENDED WHILE A NEW LOAD IS BEING FIRED HOT.

When you burn a new load of wood hot to heat up the wood, the stove and the chimney, the result will be a surge of heat from the stove. This heat surge is welcome when the room temperature is a little lower than desirable, but not welcome if the space is already warm. Therefore, allow each load of wood to burn down so that the space begins to cool off a little before loading. Letting the space cool before loading is one of the secrets to clean burning and effective zone heating.

4.3.5 TURNING DOWN THE AIR SUPPLY

Once the firewood, firebox and chimney are hot, you can begin to reduce the air supply for a steady burn.

As you reduce the air supply to the fire, two important things happen. First, the firing rate slows down to spread the heat energy in the fuel over a longer period of time. Second, the flow rate of exhaust through the stove and flue pipe slows down, which gives more time for the transfer of heat from the exhaust. You will notice that as you reduce the air setting, the flames slow down. This is your indication that the stove is burning at its peak efficiency.

If the flames get small and almost disappear when you turn down the air, you have turned down the air too early, or your firewood is wetter than it should be. With good fuel and correct air control use, the flames should slow down, but should stay large and steady, even as the air supply is reduced.

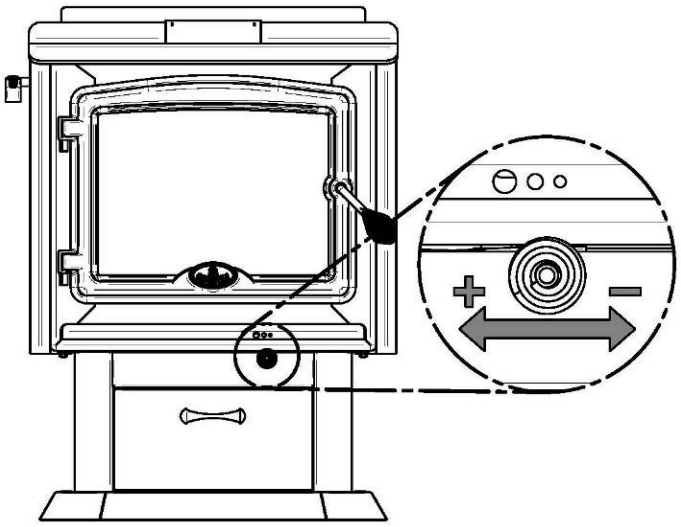

4.3.6 USE OF THE BYPASS DAMPER

Your stove is equipped with a bypass damper. This feature should be used, if needed, upon start-up of the stove to help heat-up the chimney faster. The bypass damper should be closed as soon as there is a fire going inside the firebox and smoke is moving upward through the exhaust system. The bypass damper should also be used upon reloading to avoid smoke spillage into the room. Before reloading your stove, open the primary air intake control completely and then, open the bypass damper. Wait for approximately 10 to 15 seconds and open the stove door. Close the bypass damper when you are finished reloading. **Never leave the bypass damper open under any condition unless you are building a fire or reloading the unit.** To open the by-pass damper, insert the removable handle into the small rod extension located on the left-end side of the unit. Turn the handle clockwise to open the damper. Turn the handle counterclockwise to close the damper.

Open **Close**

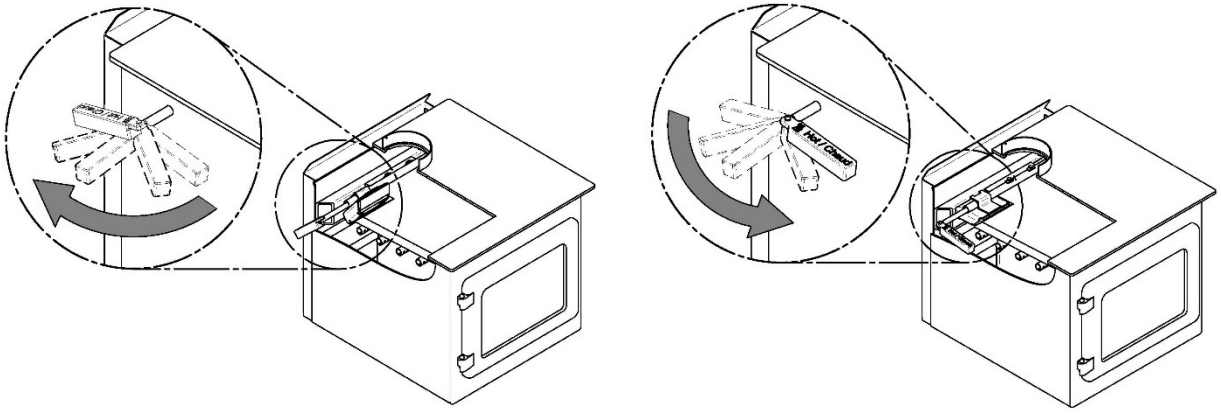

CAUTION: NEVER LEAVE THE REMOVABLE HANDLE INTO THE SMALL ROD EXTENSION UNLESS YOU ARE BUILDING A FIRE OR RELOADING THE UNIT. THE HANDLE SHOULD BE REMOVED FROM THE STOVE AT ALL OTHER TIMES AND PLACED ON ITS HANDLE SUPPORT (A).

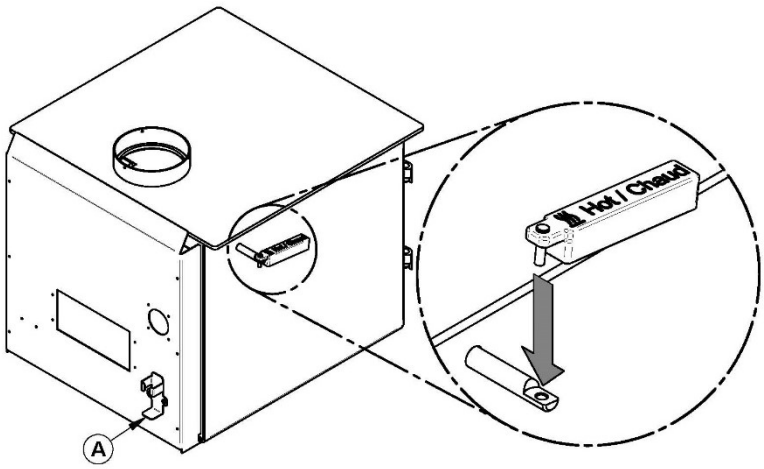

CAUTION: THE HANDLE CAN BECOME VERY HOT. GLOVES ARE REQUIRED TO HANDLE THE BYPASS DAMPER.

4.3.7 BUILDING DIFFERENT FIRES FOR DIFFERENT NEEDS

Using the air control is not the only way to match the stove's heat output to the heat demand. Your house will need far less heat in October than in January to be kept at a comfortable temperature. If you fill the firebox full in fall weather, you will either overheat the space or turn the stove down so much that the fire will be smoky and inefficient. Here are some suggestions for building fires to match different heat demand.

4.3.7.1 Small Fires to Take the Chill Off the House

To build a small fire that will produce a low heat output, use small pieces of firewood and load them crisscross in the firebox. The pieces should be only 3" to 4" in diameter. After raking the coals, you can lay two pieces parallel to each other corner to corner in the firebox and lay two more across them in the other direction. Open the air control fully and only reduce the air after the wood is fully flaming. This kind of fire is good for mild weather when you are around to tend the stove and should provide enough heat for four hours or more. Small fires like this are a good time to use softer wood species so there will be less chance of overheating the house.

4.3.7.2 Long Lasting Low Output Fires

Sometimes you will want to build a fire to last up to eight hours, but don't need intense heat. In this case use soft wood species and place the logs compactly in the firebox so the pieces are packed tightly together. You will need to fire the load hot for long enough to fully char the log surfaces before you can turn the air down. Make sure the fire is flaming brightly before leaving the fire to burn.

4.3.7.3 High Output Fires for Cold Weather

When the heat demand is high during cold weather, you'll need a fire that burns steadily and brightly. This is the time to use your biggest pieces of hardwood fuel if you have it. Put the biggest pieces at the back of the firebox and place the rest of the pieces compactly. A densely built fire like this will produce the longest burn your stove is capable of.

You will need to be cautious when building fires like this because if the air is turned down too much, the fire could smoulder. Make sure the wood is flaming brightly before leaving the fire to burn.

4.3.7.4 Maximum Burn Cycle Times

The burn cycle time is the period between loading wood on a coal bed and the consumption of that wood back to a coal bed of the same size. The flaming phase of the fire lasts for roughly the first half of the burn cycle and the second half is the coal bed phase during which there is little or no flame. The length of burn you can expect from your stove, including both the flaming and coal bed phases, will be affected by a number of things, such as:

- firebox size,
- the amount of wood loaded,
- the species of wood you burn,
- the wood moisture content,
- the size of the space to be heated,
- the climate zone you live in, and
- the time of year.

The table below provides a very general indication of the maximum burn cycle times you are likely to experience, based on firebox volume.

FIREBOX VOLUME	MAXIMUM BURN TIME
<1.5 cubic feet	3 to 5 hours
1.5 c.f. to 2.0 c.f.	5 to 6 hours
2.0 c.f. to 2.5 c.f.	6 to 8 hours
2.5 c.f. to 3.0 c.f.	8 to 9 hours
>3.0 c.f.	9 to 10 hours

Long burn times are not necessarily an indication of efficient stove operation. When you are home during the day and able to tend the fire, it is preferable to build a smaller fire that might provide three or four hours of heating than to fully load the firebox for a much longer burn. Shorter burn cycles make it easier to match the heat output of the stove to the heat demand of the space.

4.3.7.5 North-South Fires Versus East-West Fires

In fireboxes that are roughly square, wood can be loaded so that looking through the glass door you see the ends of the logs (north-south) or the sides of the logs (east-west).

East-west loads that are built compactly break down slowly when heated, but the amount of wood you can load is limited because if you put in too many pieces, one may fall against the glass. East-west loads are excellent for long, low output fires for relatively mild weather.

North-south loads break down more quickly, but much more wood can be loaded at a time. This makes north-south loading good for high output, long lasting fires for cold weather.

5 MAINTAINING YOUR WOOD HEATING SYSTEM

5.1 STOVE MAINTENANCE

Your new stove will give many years of reliable service if you use and maintain it correctly. Some of the internal components of the firebox, such as firebricks, baffles and air tubes, will wear over time under intense heat. You should always replace defective parts with original parts (see **Appendix 8: Exploded Diagram and Parts List**). For firing each load hot to begin a cycle as described above will not cause premature deterioration of the stove. However, letting the stove run with the air control fully open for entire cycles can cause damage over time. The hotter you run the stove throughout burn cycles, the more quickly its components will deteriorate. For that reason, **never leave the stove unattended while a new load is being fired hot**.

5.1.1 PLATED FINISH MAINTENANCE

If your appliance has a plated finish, use a metal polish and a soft cloth to clean it. Do not use abrasives such as steel wool, steel pads or an abrasive cleaner for they may scratch the finish.

5.1.2 CLEANING DOOR GLASS

Under normal conditions, your door glass should stay relatively clear. If your firewood is dry enough and you follow the operating instructions in this manual, a whitish, dusty deposit will form on the inside of the glass after a week or so of use. This is normal and can be easily removed when the stove is cool by wiping with a damp cloth or paper towel and then drying. **Never try to clean the glass when the stove is hot.**

In spring and fall when the stove is run at lower temperatures, you may see some light brown stains forming, especially at the lower corners of the glass. This indicates that the fire has been smoky and some of the smoke has condensed on the glass. When the weather is mild, you may find that letting the fire go out is better than trying to maintain a continuous fire. Use the technique described above for building a fire to take the chill off the house.

If you do get brown stains on the glass, you can remove them with special cleaners for wood stove glass doors. **Do not use abrasives to clean your stove's door glass.**

The deposits that form on the glass are the best indication of the quality of your fuel and how well you are doing in operating the stove. Your goal should be clear glass with no brown stains. If you continue to see brown stains on the glass, something about your fuel and operating procedure needs to be changed. Stains on the glass indicate incomplete combustion of the wood, which also means more smoke emissions and faster formation of creosote in the chimney.

If you see brown streaks coming from the edge of the glass, it is time to replace the gasket around the glass. Visit your stove retailer to get the self-adhesive glass gasket and follow the instructions below for installation.

5.1.3 DOOR ADJUSTMENT

In order for your stove to burn at its best efficiency, the door must provide a perfect seal with the firebox. Therefore, the gasket should be inspected periodically making sure to obtain an airtight fit. Airtightness can be improved with a simple latch mechanism adjustment. To adjust:

1. Remove the lock pin (spring pin) by pulling and turning it using pliers ("wise grip").
2. Turn the handle counterclockwise one turn to increase pressure.
3. Re-install the lock pin (spring pin) with a small hammer.

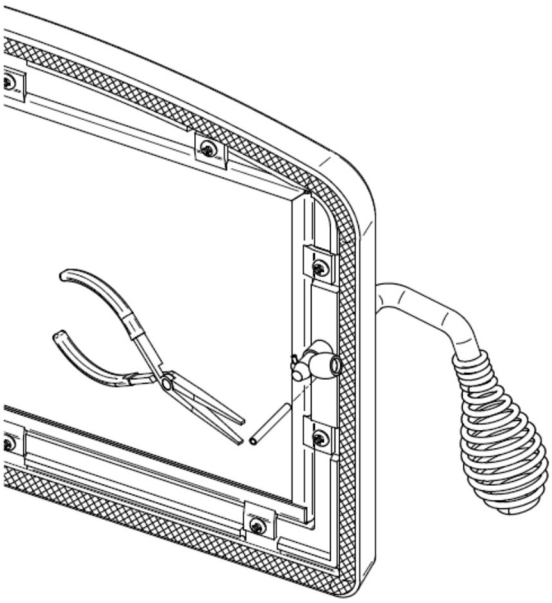

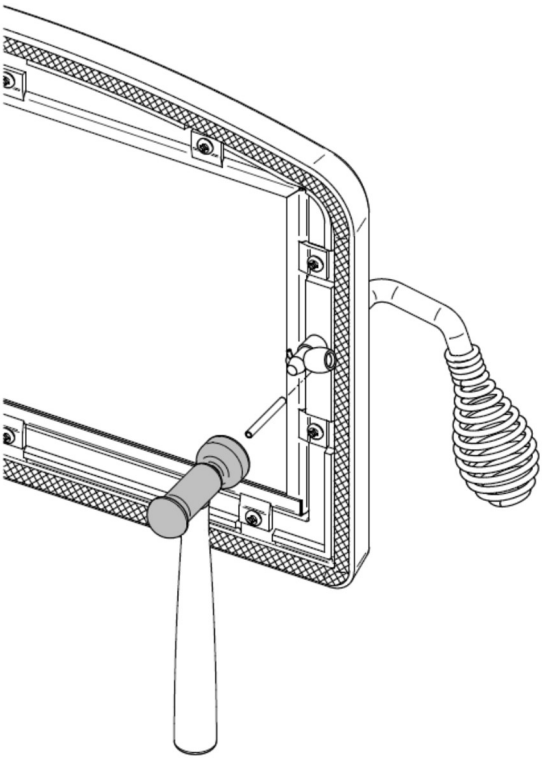

5.1.4 REPLACING THE DOOR GASKET

It is important to maintain the gasket in good condition. After a year or more of use, the door gasket will compress and become hard, which may allow air to leak past it. You can test the condition of the door gasket by closing and latching the door on a strip of paper. Test all around the door. If the paper slips out easily anywhere, it is time to replace the gasket.

Use the correct replacement gasket that you can purchase from your retailer. The diameter and density of the gasket is important to getting a good seal.

Place the door face-down on something soft like a cushion of rags or piece of carpet. Remove the old gasket from the door by pulling and prying it out with an old screwdriver. Then use the screwdriver to scrape the old gasket adhesive from the door. Now run a 1/4” (6 mm) bead of high temperature silicone in the door gasket groove. Starting from the middle of the hinge side, press the gasket into the groove. Do not stretch the gasket as you place it. Leave the gasket about 1/2” long when you cut it and press the end into the groove. Tuck any loose fibres under the gasket and into the silicone. Close the door and do not use the stove for 24 hours.

5.1.5 REPLACING THE GLASS GASKET AND/OR THE GLASS

It is a good idea to replace the glass gasket when the door gasket is replaced. The gasket is flat, adhesive-backed, woven fibreglass. Remove the screws (A) and glass retaining clips (B) then both glass frames (C) that hold the glass to the door frame (E). Lift out the glass (D) and pull off the old gasket. This is a good time to clean the glass thoroughly.

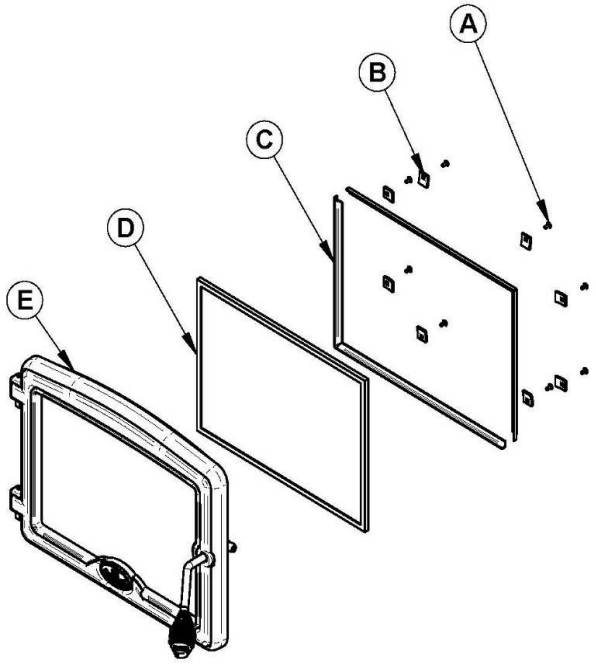

The gasket must be centred on the edge of the glass. To do this easily, peel back a section of the paper covering the adhesive and place the gasket on a table with the adhesive side up. Stick the end of the gasket to the middle of one edge, then press the edge of the glass down onto the gasket, taking care that it is perfectly centred on the gasket. Peel off more of the backing and rotate the glass and press the next section onto the gasket. Do not stretch the gasket as you place it. Continue until you get to the start and trim the gasket to length. Now pinch the gasket to the glass in a U shape, all around the glass. Reinstall the glass, being careful to centre the glass carefully in the door. Do not over-tighten the screws. Note that the two main causes of broken door glass are uneven placement in the door and over-tightening of retaining screws.

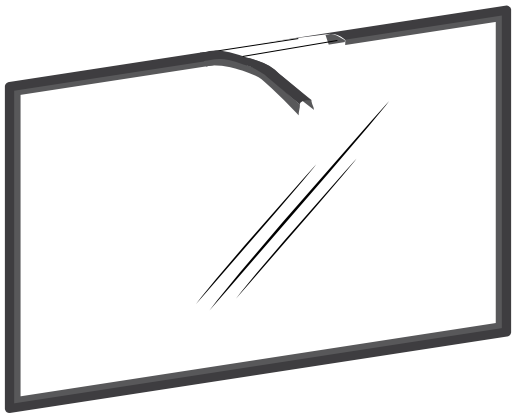

Do not abuse the glass door by striking or slamming shut. Do not use the stove if the glass is broken. To change the glass, perform the same operation described above.

5.1.6 CLEANING AND PAINTING THE STOVE

Do not attempt to clean or paint the stove when the unit is hot. Painted surfaces can be wiped down with a damp cloth. Plated surfaces may be scratched by abrasive cleaners. To maintain the finish at its original brilliance, use only a damp soft cloth to clean plated surfaces.

If the paint becomes scratched or damaged, you can give your wood stove a brand new look by repainting it with heat-resistant paint. Before painting, roughen the surface with fine sand paper, wipe it down to remove dust, and apply two thin coats of paint. For best results, use the same paint that was originally used on the stove, which is available in spray cans. See your dealer for details.

5.2 CHIMNEY AND CHIMNEY CONNECTOR MAINTENANCE

5.2.1 WHY CHIMNEY CLEANING IS NECESSARY

Wood smoke can condense inside the chimney connector and chimney, forming a combustible deposit called creosote. If creosote is allowed to build up in the venting system it can ignite when a hot fire is burned in the stove and a very hot fire can progress to the top of the chimney. Severe chimney fires can damage even the best chimneys. Smouldering, smoky fires can quickly cause a thick layer of creosote to form. When you avoid smouldering so the exhaust from the chimney is mostly clear, creosote builds up more slowly. Your new stove has the right characteristics to help you to burn clean fires with little or no smoke, resulting in less creosote in the chimney.

5.2.2 HOW OFTEN SHOULD YOU CLEAN THE CHIMNEY?

It is not possible to predict how much or how quickly creosote will form in your chimney. It is important, therefore, to check the build-up in your chimney monthly when getting used to the new stove until you determine the rate of creosote formation. Even if creosote forms slowly in your system, the chimney should be cleaned and inspected at least once each year.

It is recommended to clean thoroughly the chimney system at the end of every heating season. During summer, the air is damper and with minimal air circulation within the stove or furnace, it can mix with creosote and/or sooth deposits in the chimney system to form an acid that could accelerate the corrosion process and induce premature decay of the steel. Corrosion damages are not covered under warranty. Have your chimney system cleaned by a professional chimney sweep. Use a plastic or steel brush.

Contact your local municipal or provincial fire authority for information on how to handle a chimney fire. Have a clearly understood plan to handle a chimney fire.

5.2.3 CLEANING THE CHIMNEY

Chimney cleaning can be a difficult and dangerous job. If you don't have experience cleaning chimneys, you might want to hire a professional chimney sweep to clean and inspect the system for the first time. After having seen the cleaning process, you can decide if it is a job you would like to take on.

The most common equipment used are fibreglass rods with threaded fittings and stiff plastic brushes. The brush is forced up and down inside the chimney flue to scrub off the creosote.

The chimney connector assembly should always be cleaned at the same time the chimney is cleaned.



CAUTION: *Operation of your stove without the baffle may cause unsafe and hazardous temperature conditions and will void the warranty*. **NOTE:** Before installing the firebrick, check to ensure that none are broken or damaged in any way. If so, have the damaged ones replaced. Check the firebrick for damage at least annually and replace any broken or damaged ones with new ones. Inspection and cleaning of the chimney is facilitated by the removable baffle.

PART B - INSTALLATION

6 SAFETY INFORMATION

6.1 SUMMARY OF INSTALLATION CAUTIONS AND WARNINGS

- **THE INFORMATION GIVEN ON THE CERTIFICATION LABEL AFFIXED TO THE APPLIANCE ALWAYS OVERRIDES THE INFORMATION PUBLISHED, IN ANY OTHER MEDIA (OWNER'S MANUAL, CATALOGUES, FLYERS, MAGAZINES AND/OR WEB SITES).**
- **MIXING OF APPLIANCE COMPONENTS FROM DIFFERENT SOURCES OR MODIFYING COMPONENTS MAY RESULT IN HAZARDOUS CONDTIONS. WHERE ANY SUCH CHANGES ARE PLANNED, STOVE BUILDER INTERNATIONAL INC. SHOULD BE CONTACTED IN ADVANCE.**
- **ANY MODIFICATION OF THE APPLIANCE THAT HAS NOT BEEN APPROVED IN WRITING BY THE TESTING AUTHORITY VIOLATES CSA B365 (CANADA), AND ANSI NFPA 211 (USA).**
- **CONNECT THIS STOVE ONLY TO A LISTED FACTORY-BUILT CHIMNEY FOR USE WITH SOLID FUEL OR TO A LINED MASONRY CHIMNEY CONFORMING TO NATIONAL AND LOCAL BUILDING CODES.**
- **IF REQUIRED, A SUPPLY OF COMBUSTION AIR SHALL BE PROVIDED TO THE ROOM OR SPACE.**
- **DO NOT CONNECT TO OR USE IN CONJUNCTION WITH ANY AIR DISTRIBUTION DUCTWORK UNLESS SPECIFICALLY APPROVED FOR SUCH INSTALLATION.**
- **DO NOT CONNECT THIS UNIT TO A CHIMNEY FLUE SERVING ANOTHER APPLIANCE.**
- **THIS STOVE IS APPROVED FOR INSTALLATION IN A MOBILE HOME WHEN ALL THESE CONDITIONS ARE MET:**
  - **DO NOT INSTALL IN THE SLEEPING ROOM OF A MOBILE HOME.**
  - **THE STRUCTURAL INTEGRITY OF THE MOBILE HOME; FLOOR, WALL, AND CEILING/ROOF MUST BE MAINTAINED.**
  - **THE STOVE MUST BE ATTACHED TO THE STRUCTURE OF THE MOBILE HOME.**
  - **A FRESH AIR KIT MUST BE INSTALLED ON THE APPLIANCE (SOLD SEPARATELY).**

WARNING: IT IS NOT RECOMMENDED TO INSTALL THIS APPLIANCE IN A SLEEPING ROOM OF A CONVENTIONAL HOME.

6.2 REGULATIONS COVERING STOVE INSTALLATION

When installed and operated as described in these instructions, the Osburn 2300 wood stove is suitable for use as a freestanding heater in residential installations.

In Canada, the CSA B365 Installation Code for Solid Fuel Burning Appliances and Equipment and the CSA C22.1 Canadian National Electrical Code are to be followed in the absence of local code requirements. In the USA, the ANSI NFPA 211 Standard for Chimneys, Fireplaces, Vents and Solid Fuel-Burning Appliances and the ANSI NFPA 70 National Electrical Code are to be followed in the absence of local code requirements.

This stove must be connected to a chimney complying with the requirements for Type HT chimneys in the Standard for Factory-Built Chimneys for Residential Type and Building Heating Appliances, UL 103 HT and ULC S629 or to a code-approved masonry chimney with a flue liner.

7 CLEARANCES TO COMBUSTIBLE MATERIAL

The clearances shown in this section have been determined by test according to procedures set out in safety standards ULC S627 (Canada) and UL 1482 (U.S.A.). When the stove is installed so that its surfaces are at or beyond the minimum clearances specified, combustible surfaces will not overheat under normal and even abnormal operating conditions.

No part of the stove or flue pipe may be located closer to combustibles than the minimum clearances given below.

7.1 LOCATION OF THE CERTIFICATION LABEL

Since the information given on the certification label affixed to the appliance always overrides the information published, in any other media (owner's manual, catalogues, flyers, magazines and/or web sites) it is important to refer to it in order to have a safe and compliant installation. In addition, you will find information about your stove (model, serial number, etc.). You can find the certification label on the back of the stove.

7.2 CLEARANCES TO WALLS AND CEILING

The clearances to combustible walls may be slightly different in Canada and the U.S.A. and may also differ depending on whether you use single or double wall flue pipe. Please be sure to choose the correct clearance for your location and type of flue pipe. See figure ***Clearances to combustible.***

	APPLIANCE CLEARANCES (INSTALLATION WITH SINGLE WALL PIPE CONNECTOR)	
	CANADA	**USA**
A	15" (381 mm)	12" (305 mm)
B	12" (305 mm)	12" (305 mm)
C	10" (254 mm)	10" (254 mm)
K	48" (1220 mm)	48" (1220 mm)
L	84" (213 cm)	84" (213 cm)

	APPLIANCE CLEARANCES (INSTALLATION WITH DOUBLE WALL PIPE CONNECTOR)	
	CANADA	**USA**
A	6" (152 mm)	6" (152 mm)
B	12" (305 mm)	12" (305 mm)
C	10" (254 mm)	10" (254 mm)
K	48" (1220 mm)	48" (1220 mm)
L	84" (213 cm)	84" (213 cm)

If the above clearances are met, then the distances measured from the flue outlet will be:

	DISTANCES* FROM PIPE CONNECTOR TO THE COMBUSTIBLE MATERIALS	
	CANADA	**USA**
D	18 1/2" (470 mm)	15 1/2" (394 mm)
E	21" (533 mm)	21" (533 mm)
F	18 1/2" (470 mm)	18 1/2" (470 mm)

	DISTANCES* FROM PIPE CONNECTOR TO THE COMBUSTIBLE MATERIALS	
	CANADA	**USA**
D	9 1/2" (241 mm)	9 1/2" (241 mm)
E	21" (533 mm)	21" (533 mm)
F	18 1/2" (470 mm)	18 1/2" (470 mm)

***The pipe distances listed in this table refer to the distances obtained when the stove is installed in accordance with the appliance clearances above mentioned. However, you can install the stove at reduced clearances; follow the instructions in Section 7.4: *Reducing Wall and Ceiling Clearances Safely*. Where they are followed, the new distance of the pipe to combustible materials must be respected in the appropriate certification of the pipe.**

Clearances with ceiling (L) lowered to 72" (183 cm)

	APPLIANCE CLEARANCES (INSTALLATION WITH SINGLE WALL PIPE CONNECTOR)	
	CANADA	**USA**
A	15” (381 mm)	14” (356 mm)
B	12” (305 mm)	12” (305 mm)
C	10” (254 mm)	10” (254 mm)
K	48" (1220 mm)	48" (1220 mm)
L	72" (183 cm)	72" (183 cm)

	APPLIANCE CLEARANCES (INSTALLATION WITH DOUBLE WALL PIPE CONNECTOR)	
	CANADA	**USA**
A	8” (203 mm)	8” (203 mm)
B	12” (305 mm)	12” (305 mm)
C	10” (254 mm)	10” (254 mm)
K	48" (1220 mm)	48" (1220 mm)
L	72" (183 cm)	72" (183 cm)

If the above clearances are met, then the distances measured from the flue outlet will be:

	DISTANCES* FROM PIPE CONNECTOR TO THE COMBUSTIBLE MATERIALS	
	CANADA	**USA**
D	18 1/2” (470 mm)	17 1/2” (445 mm)
E	21” (533 mm)	21” (533 mm)
F	18 1/2” (470 mm)	18 1/2” (470 mm)

	DISTANCES* FROM PIPE CONNECTOR TO THE COMBUSTIBLE MATERIALS	
	CANADA	**USA**
D	11 1/2" (292 mm)	11 1/2" (292 mm)
E	21” (533 mm)	21” (533 mm)
F	18 1/2” (470 mm)	18 1/2” (470 mm)

***The pipe distances listed in this table refer to the distances obtained when the stove is installed in accordance with the appliance clearances above mentioned. However, you can install the stove at reduced clearances; follow the instructions in Section 7.4: *Reducing Wall and Ceiling Clearances Safely*. Where they are followed, the new distance of the pipe to combustible materials must be respected in the appropriate certification of the pipe.**

Clearances for mobile homes

	MOBILE HOME APPLIANCE CLEARANCES (INSTALLATION WITH DOUBLE WALL PIPE CONNECTOR)	
	CANADA	**USA**
A	9” (229 mm)	9” (229 mm)
B	15” (381 mm)	15” (381 mm)
C	9” (229 mm)	9” (229 mm)
K	48" (1220 mm)	48" (1220 mm)
L	84" (213 cm)	84" (213 cm)

If the above clearances are met, then the distances measured from the flue outlet will be:

	DISTANCES* FROM PIPE CONNECTOR TO THE COMBUSTIBLE MATERIALS	
	CANADA	**USA**
D	12 1/2" (318 mm)	12 1/2" (318 mm)
E	24" (610 mm)	24" (610 mm)
F	17 1/2" (445 mm)	17 1/2" (445 mm)

***The pipe distances listed in this table refer to the distances obtained when the stove is installed in accordance with the appliance clearances above mentioned. However, you can install the stove at reduced clearances; follow the instructions in Section 7.4: *Reducing Wall and Ceiling Clearances Safely*. Where they are followed, the new distance of the pipe to combustible materials must be respected in the appropriate certification of the pipe.**

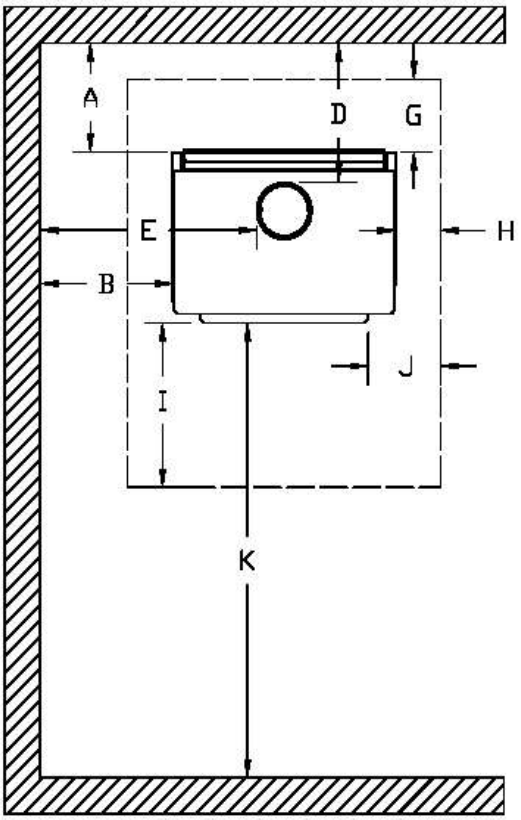

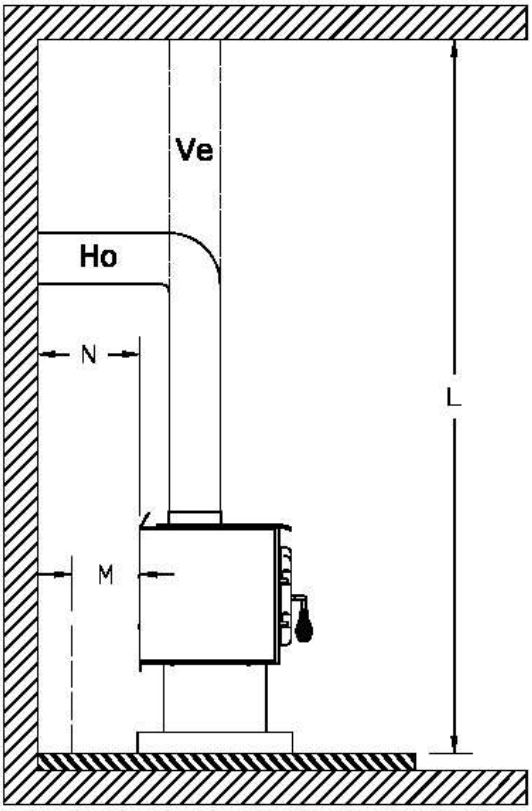

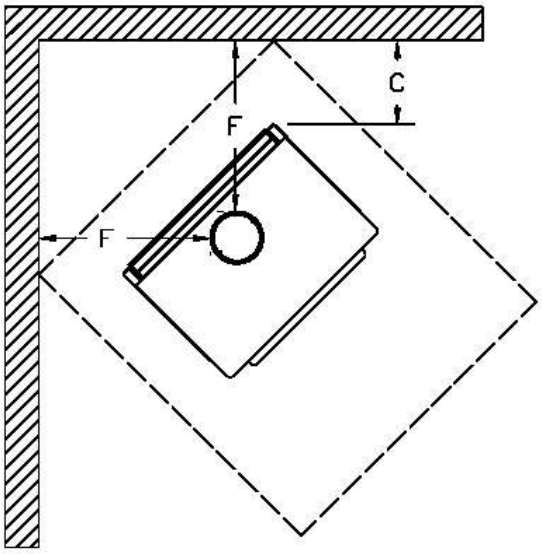

Clearances to combustible materials and floor protection

7.3 FLOOR PROTECTOR

Your stove has been conceived to prevent the floor from overheating. However, it must be placed on a noncombustible surface to protect the floor from hot embers that could fall from the stove while loading or cleaning. There are differences between floor protections in Canada and in the United States, as it is illustrated in the table below and on the figure **Clearances to combustible materials and floor protection**.

	FLOOR PROTECTOR*	
	CANADA	**USA**
G	8'' (203 mm) – Note 1	N/A (Canada only)
H	8'' (203 mm)	N/A (Canada only)
I	18'' (457 mm) From door opening	16'' (406 mm) From door opening
J	N/A (USA only)	8'' (203 mm)
M	8'' (203 mm)	N/A (Canada only)
N	N/A (USA only)	Note 2

**Steel with a minimum thickness of 0.015'' (0.38 mm) or ceramic tiles sealed together with grout. No protection is required if the unit is installed on a non-combustible floor (ex: concrete).*

Note 1: The floor protection at the back of the stove is limited to the stove's required clearance if such clearance is smaller than 8 inches (203 mm).

Note 2: Only required under the horizontal section of the connector. Must exceed each side of the connector by at least 2 inches (51 mm).

7.4 REDUCING WALL AND CEILING CLEARANCES SAFELY

It is often desirable to reduce the minimum installation clearances by placing the stove closer to walls so the installation takes up less floor space. You can safely reduce the minimum clearances by permanently installing a shield between the stove and combustible material. The rules for safe shields can be complicated, so read them carefully and follow them exactly. Note that there may be minor regional differences in clearance reduction rules so be sure to check with your building or fire inspector before proceeding.

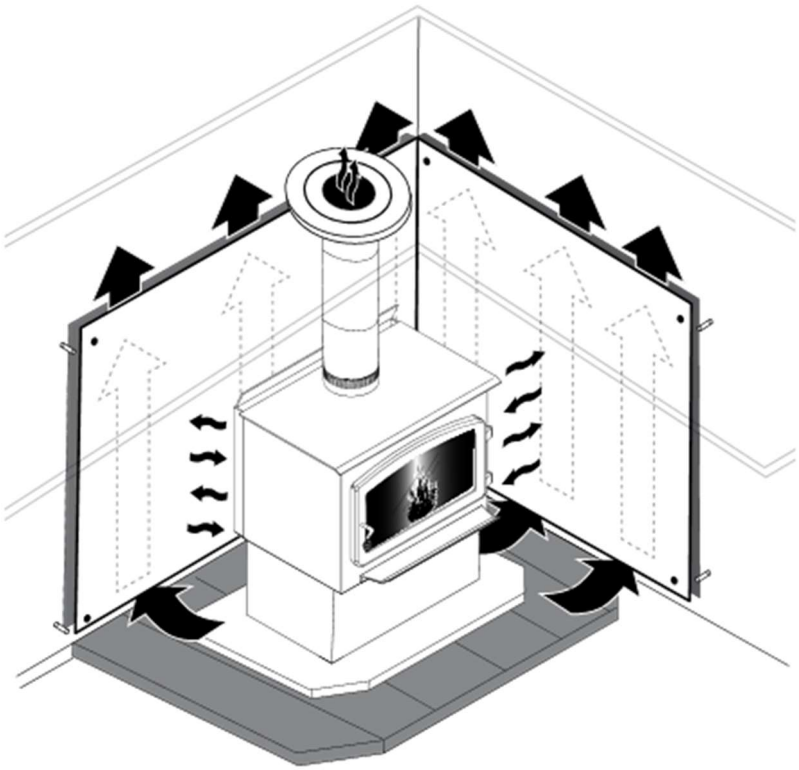

7.4.1 SHIELD CONSTRUCTION RULES

See figure ***Clearances for shield construction*** to match each letter to a clearance.

- Adhesives used in shield construction must not ignite or lose adhesive qualities at temperatures likely to be encountered.
- Mounting hardware which extends from the shield surface into combustibles may be used only at the edges of the shield.
- Mounting hardware must allow full vertical ventilation.

A Minimum clearance between the appliance top and an unshielded combustible ceiling: 1041 mm (41 in.).

B Shield extension above appliance: 500 mm (20 in.).

C Minimum space behind shield: 25 mm (1 in.). In Canada 21 mm (7/8 in).

D Clearance along the bottom of shield: minimum: 25 mm (1 in.) and maximum: 75 mm (3 in.).

E Minimum clearance along the top of shield at ceiling: 75 mm (3 in.).

F Mounting hardware must not be located closer than 200 mm (8 in.) from the vertical centre line of the appliance.

G Edge clearance for ceiling shields to side and back walls: 75 mm (3 in.).

H Shield extension beyond each side of appliance: 450 mm (18 in.).

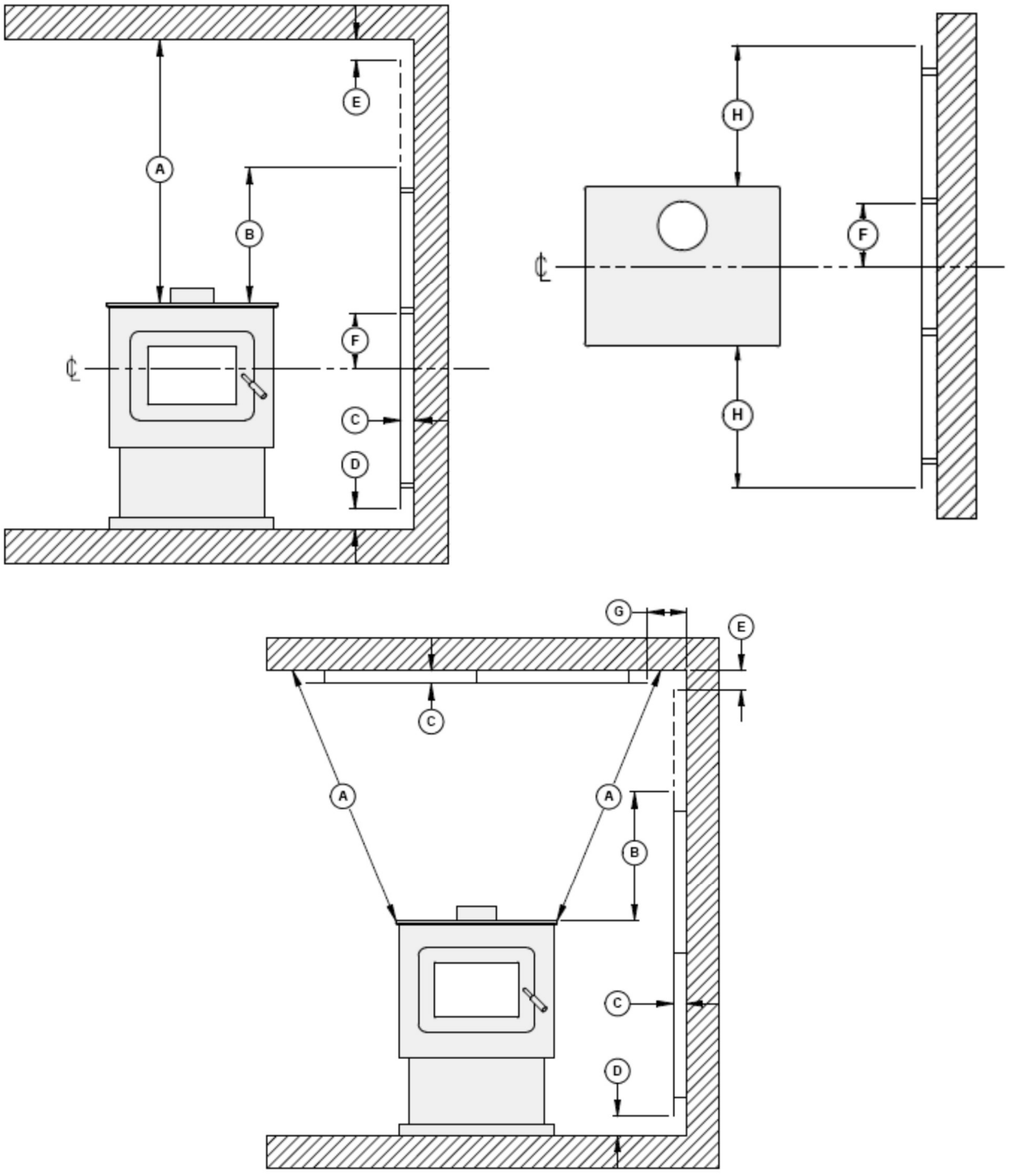

Clearances for shield construction

7.4.2 TABLE OF CLEARANCE REDUCTION PERCENTAGES

Type of shield	Clearances may be reduced by these percentages				
	Sides and rear %		Top % (ceiling)		
	Can/USA (%)	USA min.	Can/USA (%)	USA min.	
Sheet metal, a minimum of 24 gauge (0.61 mm) in thickness, spaced out at least 25 mm (1 in)* by non-combustible spacers	67	12 in	50	18 in	
Ceramic tiles, or equivalent non-combustible material, on non-combustible board spaced out at least 25 mm (1 in)* by non-combustible spacers	50	18 in	33	24 in	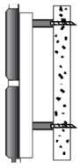
Ceramic tiles, or equivalent non-combustible material, on non-combustible board, with a minimum of 24 gauge (0.61 mm) sheet metal backing spaced out at least 25 mm (1 in)* by non-combustible spacers	67	12 in	50	24 in	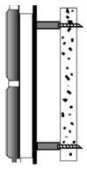
Brick, spaced out at least 25 mm (1 in)* by non-combustible spacers	50	18 in	N/A	N/A	
Brick, with a minimum of 24 gauge (0.61 mm) sheet metal backing, spaced out at least 25 mm (1 in)* by non-combustible spacers	67	12 in	N/A	N/A	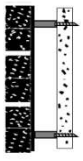

** In Canada this space can be 21 mm (7/8 in)*

8 THE VENTING SYSTEM

8.1 GENERAL

The venting system, made up of the chimney and the connecting pipe between the stove and the chimney, acts as the engine that drives your wood heating system. Even the best stove will not function safely and efficiently as intended if it is not connected to a suitable chimney.

The heat in the flue gases that pass from the stove and chimney connector into the chimney is not waste heat. This heat is what the chimney uses to make the draft that draws in combustion air, keeps smoke inside the stove and safely vents exhaust to outside. You can think of heat in the flue gas as the fuel the chimney uses to make draft.

8.2 SUITABLE CHIMNEYS

Your wood stove will provide optimum efficiency and performance when connected to a 6-inch diameter chimney flue system. The connection to a chimney having a diameter of no more than 7 inches is permitted, if it allows the proper venting of combustion gases and that such application is verified and authorized by a qualified installer. Otherwise, the diameter of the flue should be 6 inches.

To be suitable, a factory-built metal chimney must comply with UL 103 HT (U.S.A.) or ULC S629 (Canada).

8.2.1 FACTORY-BUILT METAL CHIMNEYS

These are sometimes referred to as 'high temp' chimneys because they have the special characteristics to withstand the temperatures that can be created by wood burning stoves. Factory-built chimneys are tested as a system with all the necessary components for installation. The instructions provided with the chimney by its manufacturer are the only reliable source of installation guidelines. To be safe and effective, the chimney must be installed exactly in accordance with the manufacturer's instructions. **Use only components intended for the brand and model of chimney you are using. Never substitute parts from other chimney brands or fabricate your own components. The**

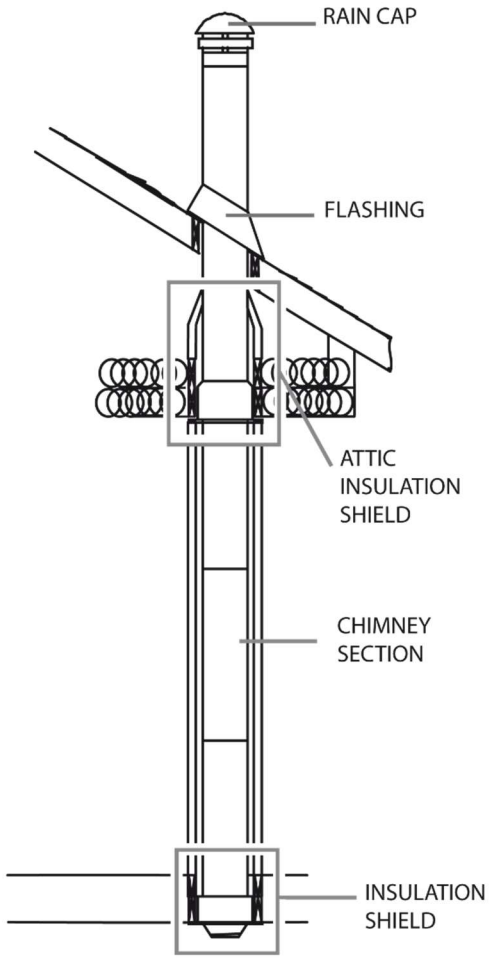

chimney must be a type suitable for solid fuel.

8.2.2 FACTORY-BUILT METAL CHIMNEYS IN MOBILE HOMES

For use in a mobile home, this stove is to be connected to a 6” in diameter double wall factory-built chimney conforming to CAN/ULC-S629, Standards for 650°C Factory-built chimney and to UL 103 HT Standard « Factory-Built Chimneys for Residential Type and Building Heating Appliances ». The total length of the flue system should be at least 12 feet including elbows, from the top of the stove.

To maintain an effective vapour barrier, insulation and waterproof at the chimney and outside flue pipe, install a mobile home roof flashing and seal it with silicone.

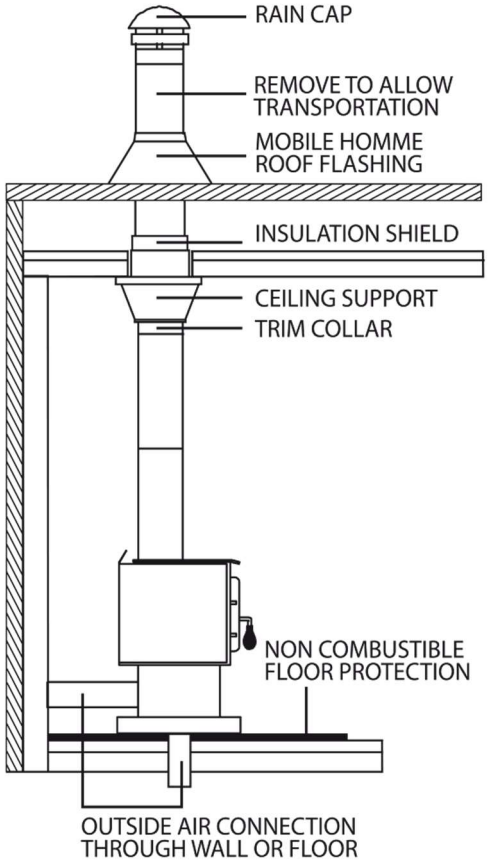

8.2.3 MASONRY CHIMNEYS

The stove may also be connected to a masonry chimney, provided the chimney complies with the construction rules found in the building code enforced locally. The chimney must have either a clay liner or a suitably listed stainless steel liner. If the masonry chimney has a square or rectangular liner that is larger in cross sectional area than a round 6” flue, it should be relined with a suitably listed 6” stainless steel liner. Do not downsize the flue to less than 6” unless the venting system is straight and exceeds 25 feet in height. When passing through a combustible wall, the use of an insulated listed thimble is required.

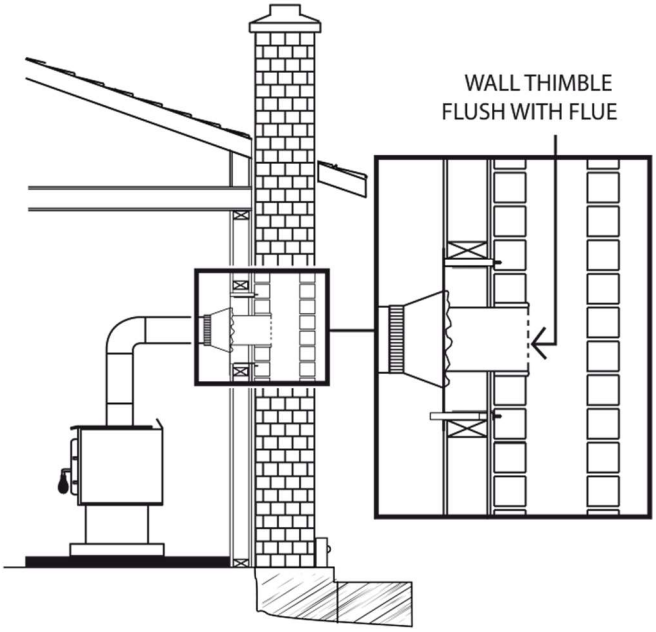

8.3 MINIMUM CHIMNEY HEIGHT

The top of the chimney should be tall enough to be above the air turbulence caused when wind blows against the house and its roof. The chimney must extend at least 1 m (3 ft.) above the highest point of contact with the roof, and at least 60 cm (2 ft.) higher than any roof line or obstacle within a horizontal distance of 3 m (10 ft.).

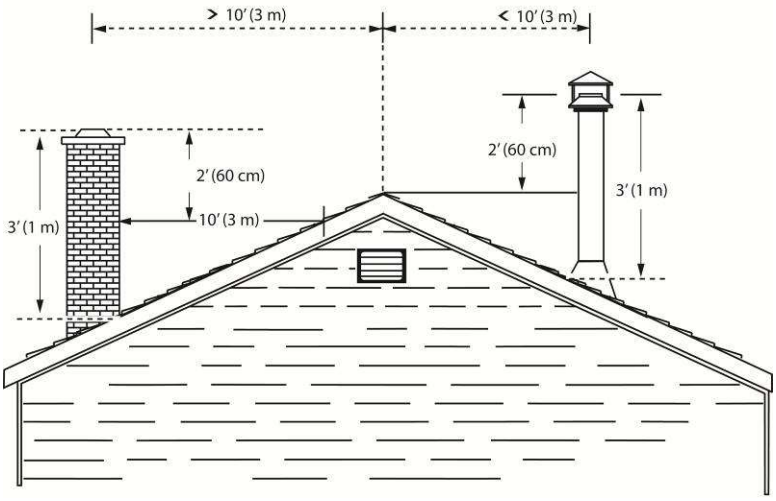

8.4 THE RELATIONSHIP BETWEEN THE CHIMNEY AND THE HOUSE

Because the venting system is the engine that drives the wood heating system, it must have the right characteristics. The signs of bad system design are cold backdrafting when there is no fire in the stove, slow kindling of new fires, and smoke roll-out when the door is opened for loading. There are two guidelines to follow. First, the chimney should be installed up through the heated space of the house, not out and up an outside wall. Second, the chimney should penetrate the top of the building at or near the highest heated space.

8.4.1 WHY INSIDE CHIMNEYS ARE PREFERRED

Venting systems that rise straight up from the stove flue collar provide the best performance. Chimneys that rise inside the warm space of the house tend to provide a small amount of draft even when there is no fire burning. This means that when you light a fire, the initial smoke goes up the chimney and strong draft builds quickly as the chimney flue warms up. Although they are common in North America, chimneys that exit a house wall and run up outside can cause problems.

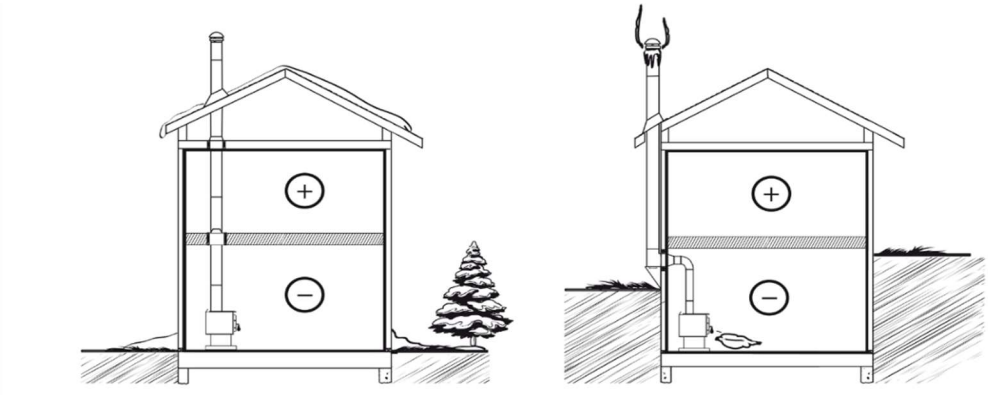

Good System Design
Inside chimneys are preferred because even when no fire is burning, there is normally upward flow in the system.

Inferior System Design
Outside chimneys are a problem because when no fire burns they will go into cold backdraft if the stove is installed low in the house.

8.4.2 WHY THE CHIMNEY SHOULD PENETRATE THE HIGHEST HEATED SPACE

When it is cold outside, the warm air in the house is buoyant so it tends to rise. This tendency of warm air to rise creates a slight pressure difference in the house. Called 'stack effect', it produces a slightly negative pressure low in the house (relative to outside) and a slightly positive pressure zone high in the house. If there is no fire burning in a heater connected to a chimney that is shorter than the warm space inside the house, the slight negative pressure low in the house will compete against the desired upward flow in the chimney.

There are two reasons why the chimney in the house at right will cold backdraft when it is cold outside and there is no fire burning in the stove. First, the chimney runs up the outside of the house, so the air in it is colder and denser than the warm air in the house. And second, the chimney is shorter than the heated space of the house, meaning the negative pressure low in the house will pull outside air down the chimney, through the stove and into the room. Even the finest stove will not work well when connected to this chimney.



8.5 SUPPLY OF COMBUSTION AIR

In Canada, wood stoves are not required to have a supply of combustion air from outdoors (except in mobile homes) because research has shown that these supplies do not give protection against house depressurization and may fail to supply combustion air during windy weather. However, to protect against the risk of smoke spillage due to house depressurization, **a carbon monoxide (CO) detector/alarm is required** in the room where the stove is installed. The CO detector will provide warning if for any reason the wood stove fails to function correctly.

8.5.1 COMBUSTION AIR SUPPLY IN MOBILE HOMES

Only a wood stove certified and labelled as 'mobile home approved' may be installed in a mobile home. Wood stoves installed in mobile homes must have a ducted supply of combustion air from outdoors. This air supply should be routed down through the house floor into the vented crawl space under the mobile home. The air supply duct should be non-combustible aluminum flex duct with a screened weatherhood on the outside end.

Note: Fabric duct may also be used, provided it is suitable for HVAC use and meets the requirements of CAN/ULC S110 or UL 181 Class 1 standards. It must have a non-combustible insulation and be corrosion resistant.

Where a mobile home has been converted to a standard house by mounting it on a permanent basement foundation, the supply of outdoor air is not required.

8.5.2 AIR SUPPLY IN CONVENTIONAL HOUSES

The safest and most reliable supply of combustion air for your wood stove is from the room in which it is installed. Room air is already preheated so it will not chill the fire, and its availability is not affected by wind pressures on the house. Contrary to commonly expressed concerns, almost all tightly sealed new houses have enough natural leakage to provide the small amount of air needed by the stove. The only case in which the wood stove may not have adequate access to combustion air is if the operation of a powerful exhaust device (such as a kitchen range exhaust) causes the pressure in the house to become negative relative to outdoors.

Some jurisdictions in the United States require that wood stoves have a supply of combustion air from outdoors. If you do install an air supply through the wall of the house, be aware that its pressure can be affected during windy weather. If you notice changes in wood stove performance in windy weather, and in particular if smoke puffs from the stove, you should disconnect the outdoor air duct from the stove and remove the duct. In some windy conditions, negative pressure at the duct weatherhood outside the house wall may draw hot exhaust gases from the stove backwards through the duct to outdoors. Check the outdoor air duct for soot deposits when the full system is cleaned and inspected at least once each year.

8.6 INSTALLING THE CHIMNEY CONNECTOR

The chimney connector is the single or double wall pipe installed between the stove flue collar and the chimney breech. Single wall pipe components are available from most hardware and building supply stores. These components are not usually tested to a particular standard and certified as compliant. Therefore, a list of rules found in solid fuel installation codes apply to the installation of single wall pipe.

Double wall chimney connectors are tested and certified. The rules for double wall pipe are found in the manufacturer's installation instructions. These rules will be very different than those for single wall.

8.6.1 INSTALLATION OF SINGLE WALL CHIMNEY CONNECTOR

The chimney connector assembly has been called 'the weak link' in the safety of wood heating systems because failure to install the connector properly (which has been common in the past) can result in house fires.

The best flue pipe assembly is one that rises straight up from the stove to the base of the chimney with no elbows. Straight assemblies are less likely to cause problems like smoke roll-out when the door is opened for loading. They are also more stable and easier to maintain than assemblies with elbows. Horizontal runs of flue pipe should be avoided where possible because they reduce chimney draft.

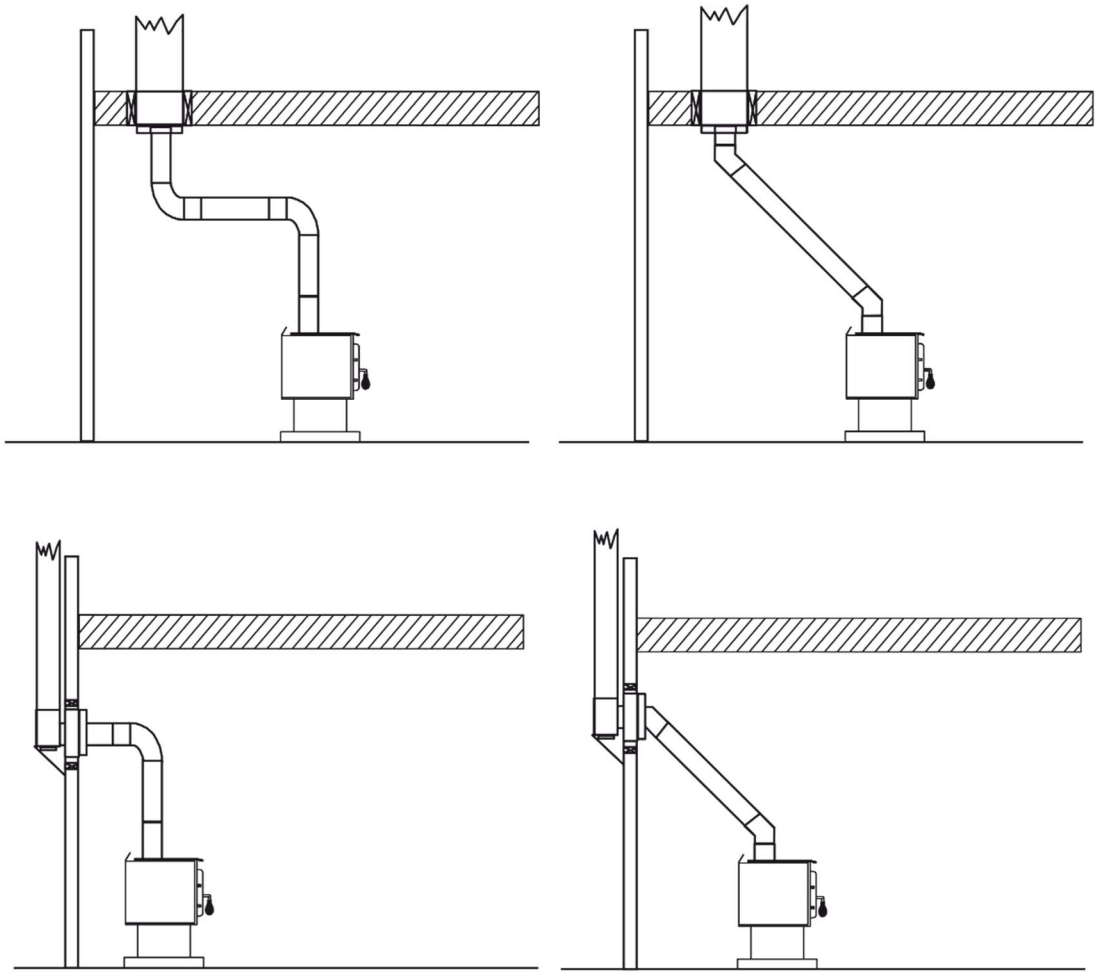

Use 45° elbows where possible, instead of 90° elbows.

The rules below are based on those found in the CSA B365 installation code. Please carefully follow these installation instruction rules, or those enforced where you live.

- Maximum overall length of straight pipe: 3 m (10 ft.) including elbows.
- Minimum clearance from combustible material: 450 mm (18 in.). The minimum clearance may be reduced by 50 percent to 225 mm (9 in.) if suitable shielding is installed either on the pipe or on the combustible surface.
- The assembly should be as short and direct as possible between the stove and chimney. The use of two 45°elbows is often preferable to a single 90° elbow because less turbulence is created in the exhaust flow and they result in less horizontal run.
- Maximum number of 90° elbows: 2.
- Maximum unsupported horizontal length: 1 m (3 feet).
- Galvanized flue pipes must not be used because the coatings vaporize at high temperatures and release dangerous gases. Use black painted flue pipes.
- Flue pipes must be at least 24 gauge in thickness.
- Flue pipe joints should overlap 30 mm (1 1/4 in.)
- Each joint in the assembly must be fastened with at least three screws.
- The assembly must have allowance for expansion: elbows in assemblies allow for expansion; straight assemblies should include an inspection wrap with one end unfastened, or a telescopic section.
- Minimum upward slope towards the chimney: 20 mm/m (1/4 in/ft.).
- One end of the assembly must be securely fastened to the flue collar with 3 sheet metal screws and the other end securely fastened to the chimney.
- There must be provision for cleaning of the pipes, either through a clean out or by removal of the pipe assembly. Removal of the assembly should not require that the stove be moved.
- The male ends of the sections must be oriented towards the appliance so that falling dust and condensation stay inside the pipe.
- A flue pipe must never pass through a combustible floor or ceiling or through an attic, roof space, closet or concealed space.
- Where passage through a wall or partition of combustible construction is desired, the installation shall conform to CAN/CSA-B365, Installation Code for Solid-Fuel-Burning Appliances and Equipment.

The ideal flue pipe assembly is one that rises straight up from the appliance flue collar and directly into the chimney with no elbows. A straight up connector assembly needs either a telescopic length or an inspection wrap (pipe coupler) to allow it to be assembled and disassembled without moving the stove.

A straight flue pipe assembly offers the least restriction to gas flow and results in stronger draft. Straight assemblies also need less maintenance because there are no corners to collect creosote.

The chimney connector must be in good condition.

APPENDIX 1: TOP BRICKS INSTALLATION

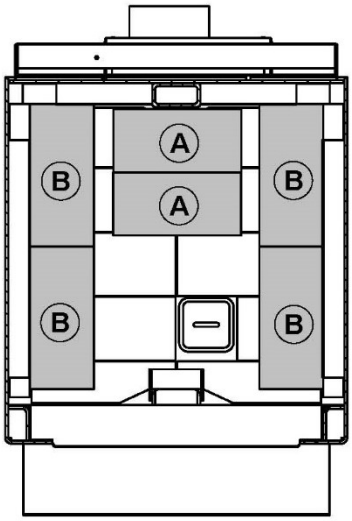

For transportation purpose, the top bricks have been laid on the bottom of the firebox. It is mandatory to install them on the brick supports before you operate the stove. **Failure to install the bricks as describe bellow may result in stove damage and will void warrantee.**

A	**(2x)** 4" X 8" (BACK)
B	**(4x)** 4" X 9" (LEFT & RIGHT)

1)

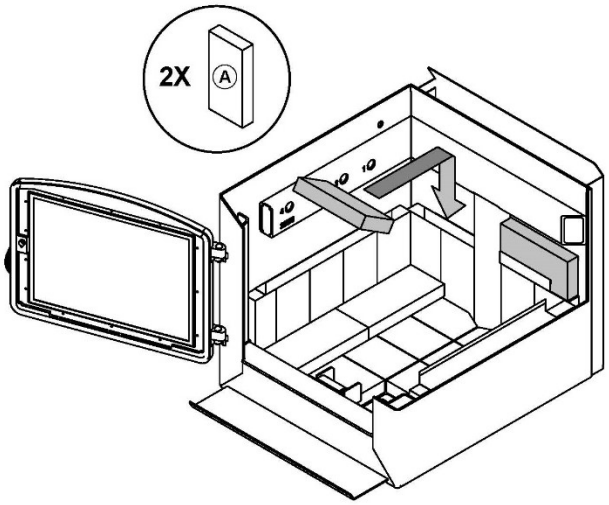

2)

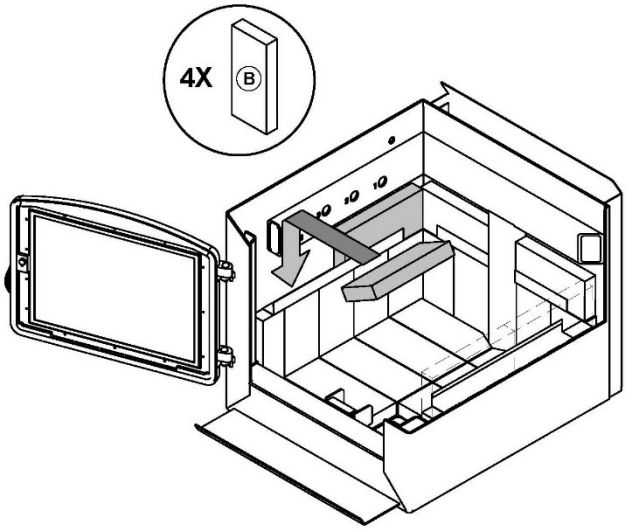

APPENDIX 2: INSTALLATION OF THE BYPASS DAMPER HANDLE HOLDER

The bypass damper handle holder (A) can be installed using two screws (B) to the left or right side on the back heat shield of the stove. The screws and holder are provided with the manual kit.

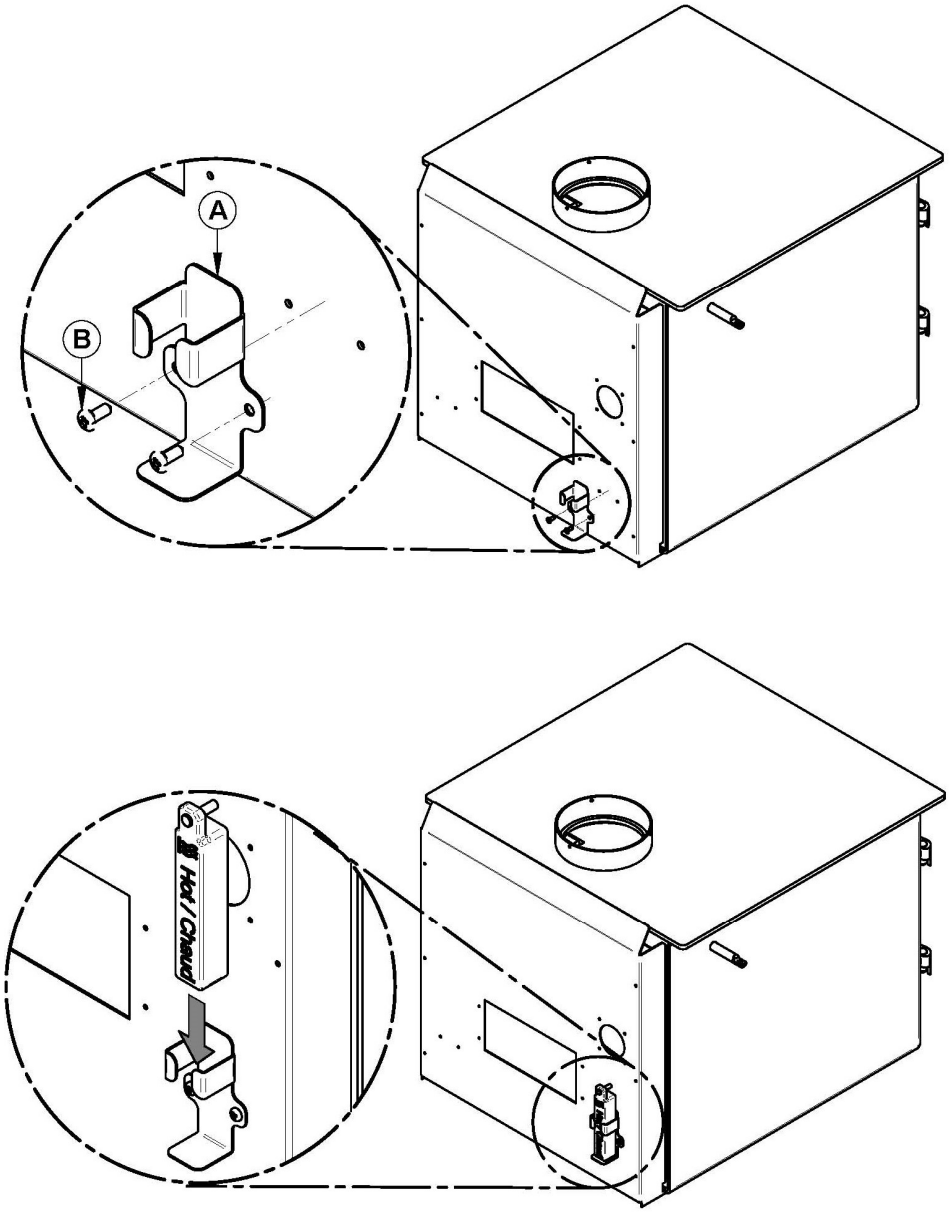

APPENDIX 3: INSTALLING THE OPTIONAL LEGS OR PEDESTAL

The leg or pedestal kit must be assembled to the firebox before positioning the stove. See installation instructions below:

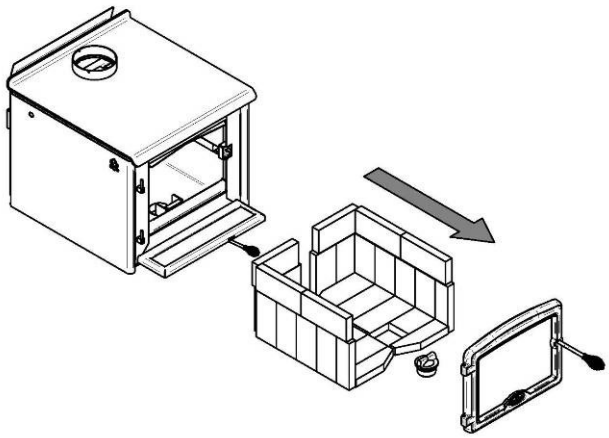

1- Remove the firebricks, the ash dump plug and the loading door from the stove to avoid breaking any parts and facilitate handling in the followings steps.

2- Gently flip the stove on its back.

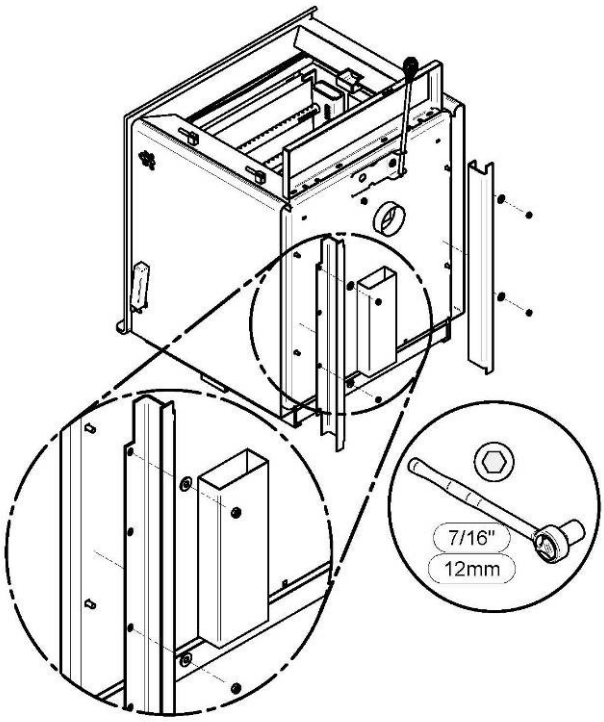

3- Remove the (2) transport support bracket which can be discarded. Keep the (4) bolts, washers and nuts since they will be required in **step 5**.

Leg kit installation:

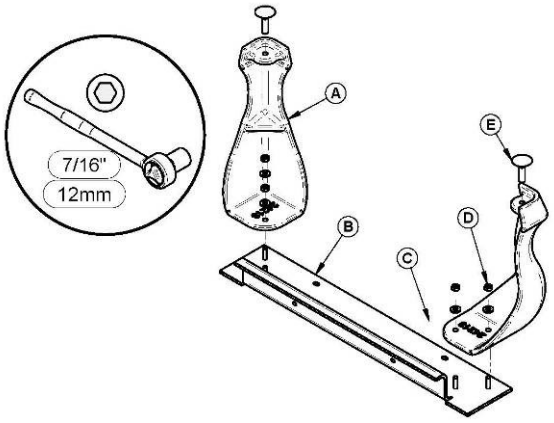

4- Secure each leg (A) on support (B) using (2) washers (C) and (2) nuts (D) supplied in the kit. Repeat the same mounting procedure for the second support.

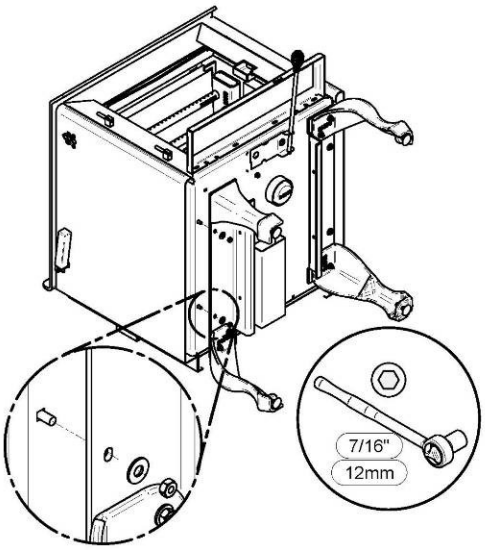

5- Secure both leg support assembly to the underside of the firebox using the bolts, washers and nuts removed in **step 3**. Supports can be installed on either side.

Note: Insert each bolt from the inside of the firebox, this will allow the bricks to sit more evenly on the floor of the firebox.

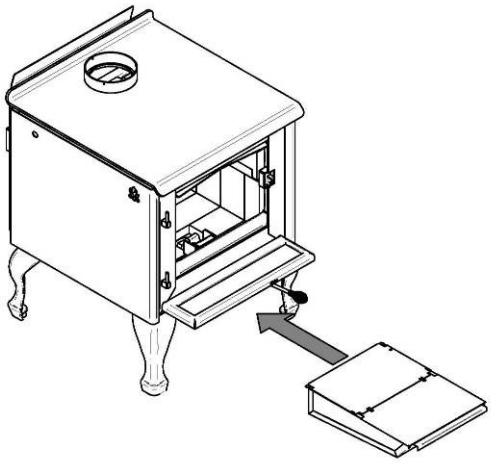

6- Gently flip the stove back on its legs making sure not to put too much weight on the rear legs.

7- Open the ash drawer lid then slide it on the left and right bend of the legs support brackets.

8- Position the stove for its installation and reinstall the door and the bricks (see **Appendix 8:** ***Exploded Diagram and Parts List*** for layout).

Note: Make sure that baffle components have not moved during the leg installation process since a flue blockage may occur.

Pedestal kit installation:

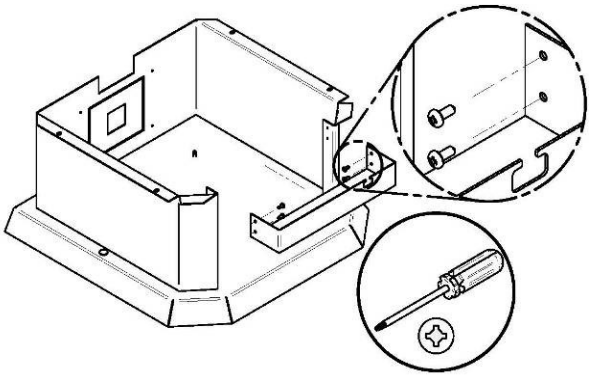

Follow **step 1, 2** and **3** of the leg kit installation.

5- Secure the air control cover to the pedestal with 2 screws. Secure pedestal base to the underside of the firebox using the bolts, washers and nuts removed in **step 3**.

Note: Insert each bolt from the inside of the firebox, this will allow the bricks to sit more evenly on the floor of the firebox.

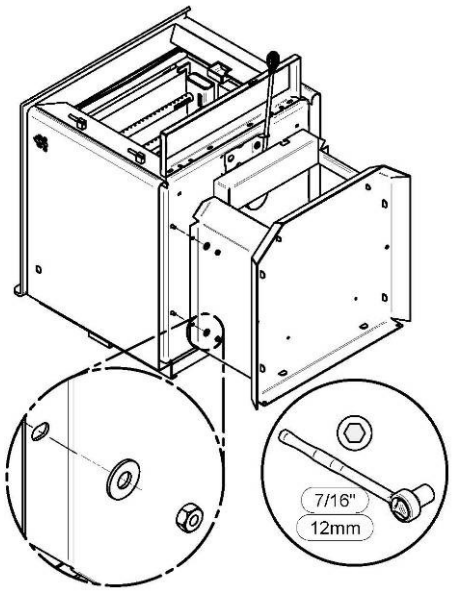

6- Gently flip the stove back on its pedestal making sure not to put too much weight on the rear edge of the base.

7- Install the coil handle on the control rod by turning it counterclockwise.

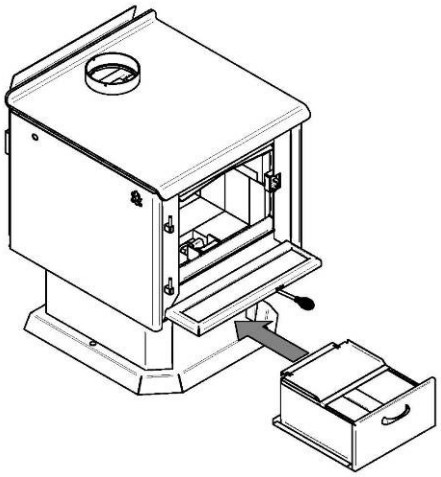

8- Open the ash drawer lid then slide it into the front opening of the pedestal.

9- Position the stove for its installation and reinstall the door and the bricks (see **Appendix 8:** ***Exploded Diagram and Parts List*** for layout).

Note: Make sure that baffle components have not moved during the leg installation process since a flue blockage may occur.

APPENDIX 4: INSTALLING THE OPTIONAL DOOR OVERLAY

In order to complete the assembly of your wood stove, you need to install the door overlay. See figure below for installation instructions:

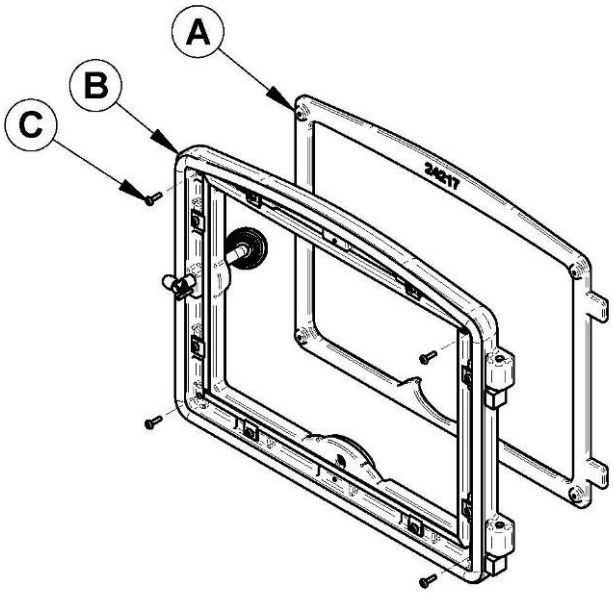

Position the overlay (A) on the door frame (B) and secure it from the inside of the door using the 4 included screws (C).

To facilitate the installation, do not tighten the screws until they are all installed.

Note: It is not necessary to remove the glass or any other component to install the overlay.

APPENDIX 5: INSTALLING THE OPTIONAL FRESH AIR INTAKE KIT (AC01336, AC01381)

For pedestal model: AC01336. For model on legs: AC01381.

When installed with a fresh air intake kit, the stove must be anchored to the floor.

This mobile home approved stove requires installation of a fresh air intake kit (A) and an insulated fresh air intake pipe (B), sold separately.

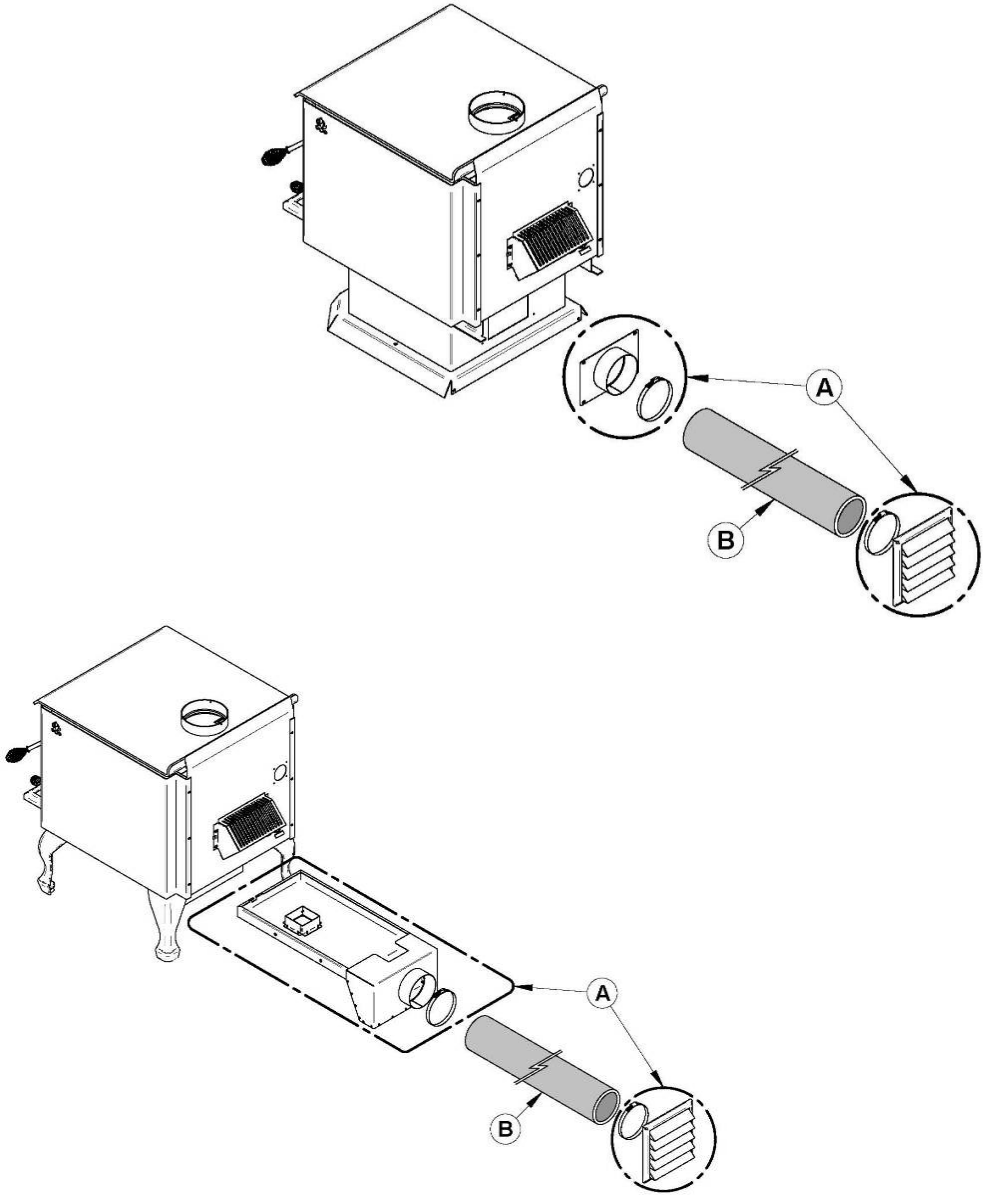

APPENDIX 6: INSTALLATION AND USE OF BLOWER AND OPTIONAL THERMODISCS

A blower is installed on the back of the stove to increase the flow of air past heat exchange surfaces and to help circulate warm air in the room. When used regularly, the blower can provide a small increase in efficiency, up to 2 percent. However, the use of a blower should not be used as a way to gain more output from a stove that is undersized for the space it is intended to heat.

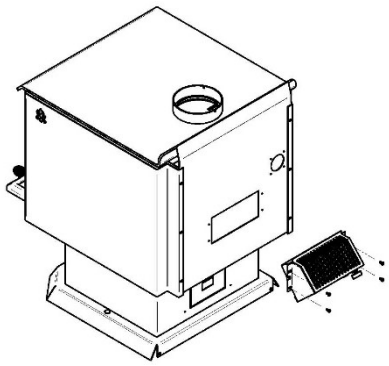

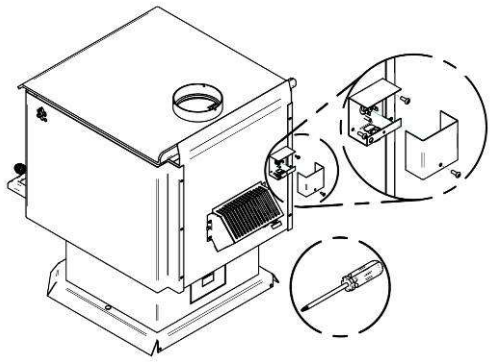

The blower has a rheostat, see the illustration on the right to identify the different adjustment positions; either from high (HI) to low (LO) or turned off (OFF).

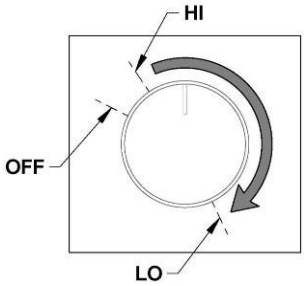

When using the optional blower, allow the stove to reach operating temperature (approximately one hour), before turning it on. The increased airflow from the blower cools the firebox and could affect the start-up combustion efficiency if the blower is turned on too early. You can also install a thermodisc to enable the blower to start or stop automatically when the stove is hot or too cold. The thermodisc part number is AC05530 for a basic model and ACO2055 for a quick connect model. Installation instructions are supplied with the blower and the thermodisc.

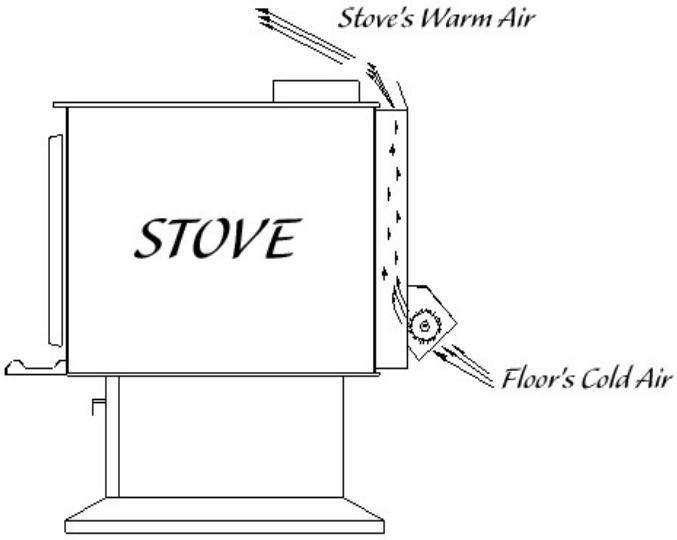

CAUTION: ENSURE THAT THE BLOWER'S POWER CORD IS NOT IN CONTACT WITH ANY SURFACE OF THE STOVE TO PREVENT ELECTRICAL SHOCK OR FIRE DAMAGE. DO NOT RUN THE POWER CORD BENEATH THE STOVE.

APPENDIX 7: INSTALLATION OF SECONDARY AIR TUBES AND BAFFLE

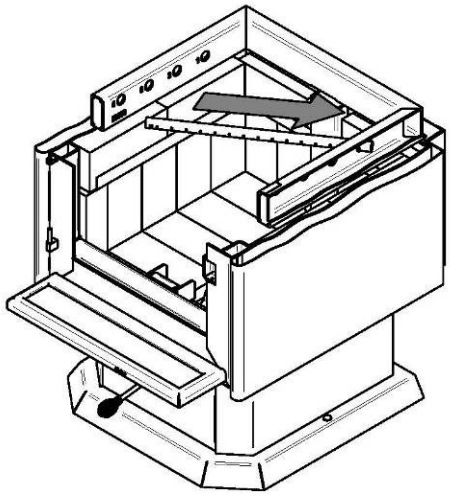

1- Starting with the rear tube, lean and insert the right end of the secondary air tube into the rear right channel hole. Then lift and insert the left end of the tube into the rear left channel.

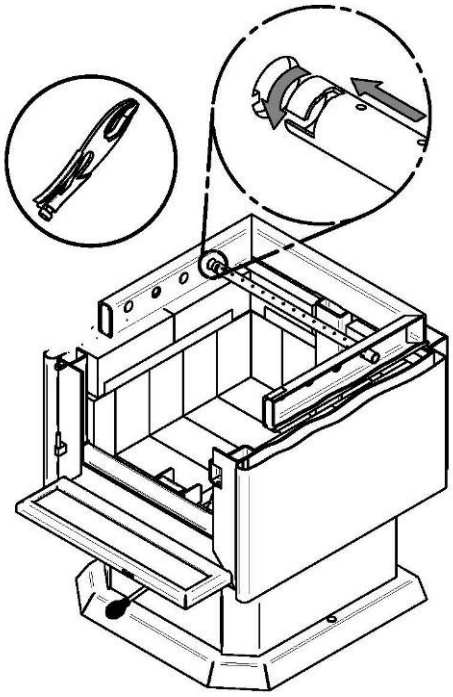

2- Align the notch in the left end of the tube with the key of the left air channel hole. Using a « Wise grip » hold the tube and lock it in place by turning the tube as shown in **detail A**. Make sure the notch reaches the end of the keyway.

3- Repeat **step 1** and **2** for the other secondary air tubes.

4- To remove the tubes, use the above steps in reverse order.

Note that secondary air tubes (B) can be replaced without removing the baffle board (A).

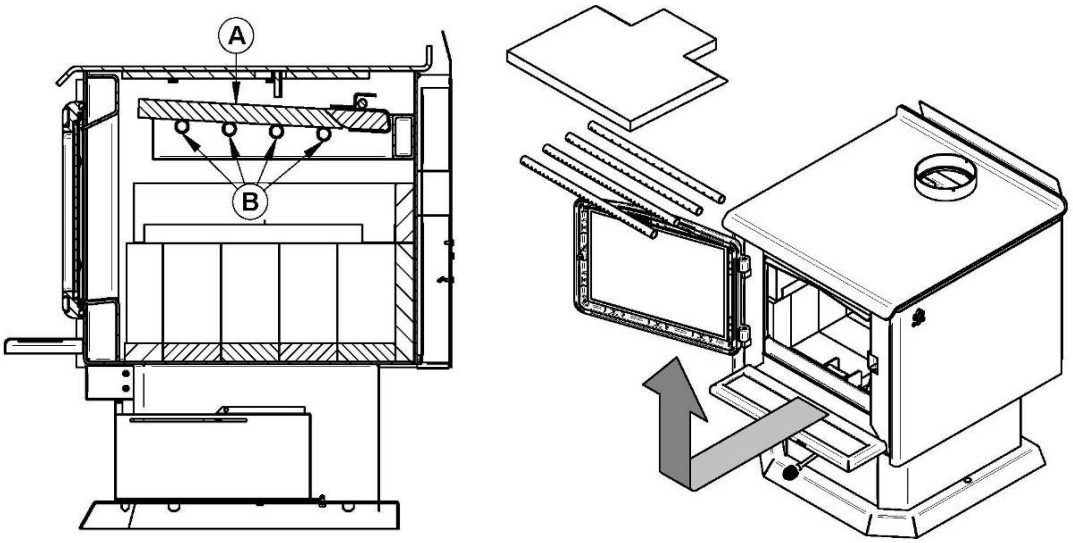

HOW TO REMOVE AND REPLACE THE BAFFLES OF THE BYPASS DAMPER REGISTRE

Follow the steps to remove the secondary air tubes (B) and the main baffle (A) as explained above. Remove the bypass baffles (C) as illustrated.

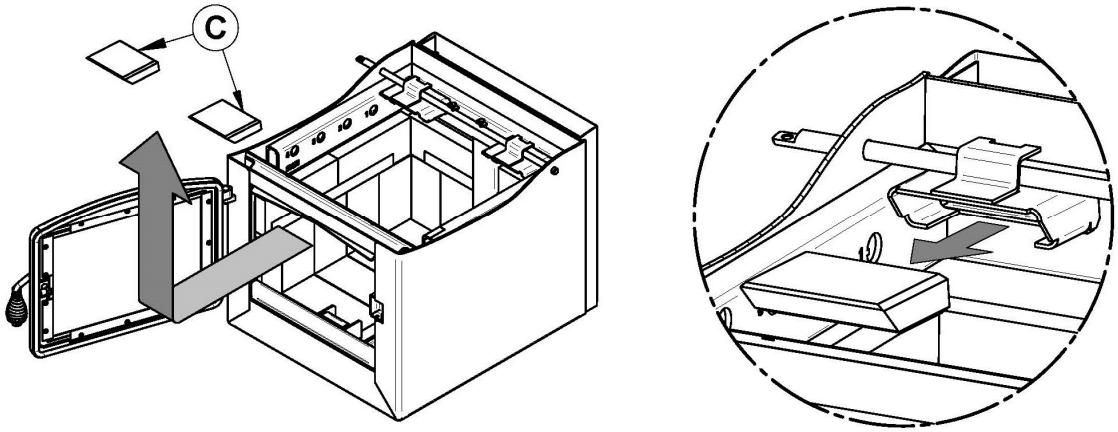

Important Notes:

The air tubes are identified for placement as follows:

Model	Type of tube
2300	Front ► 30 holes of 0.147" Middle front ► 30 holes of 0.152'' Middle rear ► 20 holes of 0.128'' Rear ► 15 holes of 0.128''

APPENDIX 8: EXPLODED DIAGRAM AND PARTS LIST

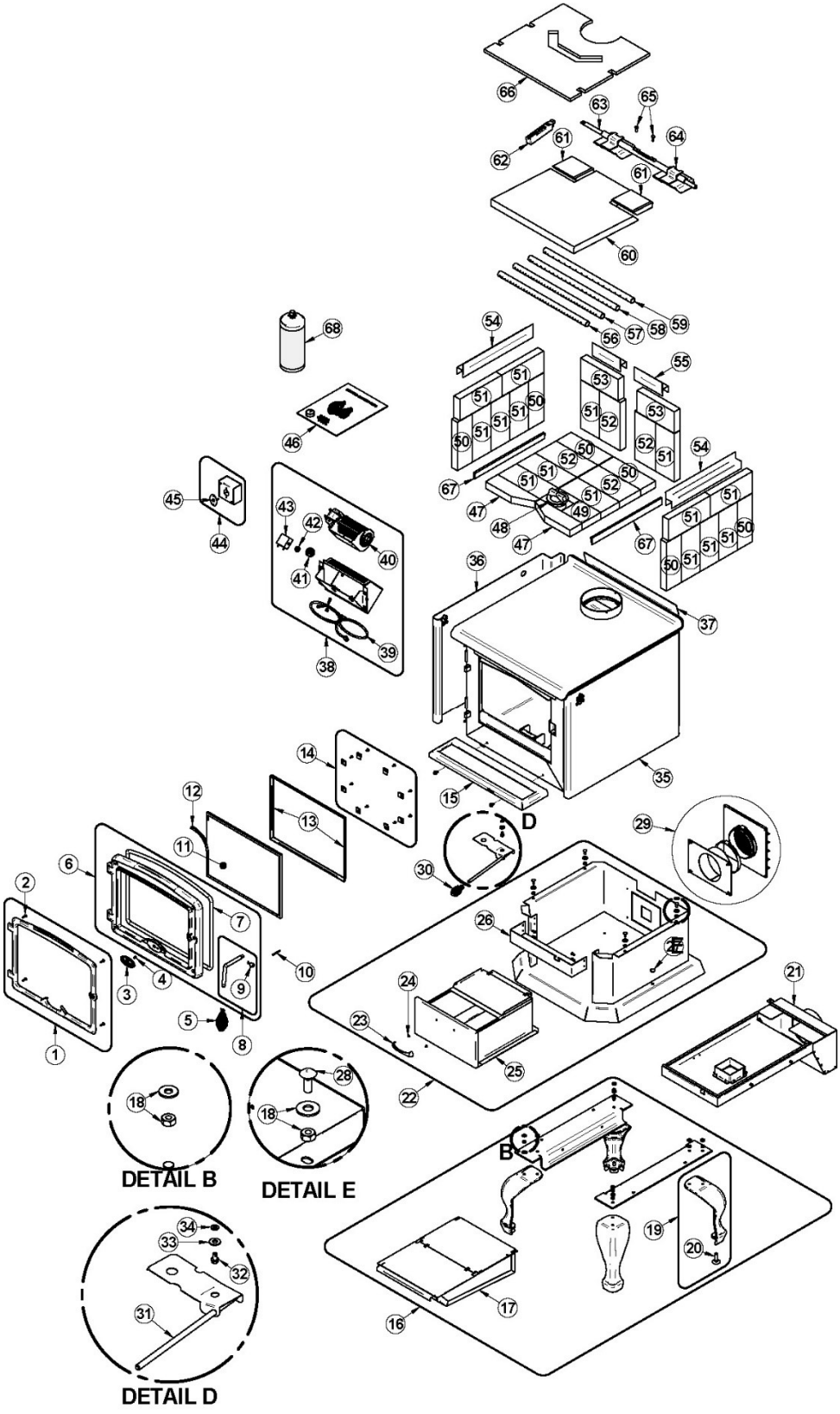

IMPORTANT: THIS IS DATED INFORMATION. When requesting service or replacement parts for your stove, please provide the model number and the serial number. We reserve the right to change parts due to technology upgrade or availability. Contact an authorized dealer to obtain any of these parts. Never use substitute materials. Use of non-approved parts can result in poor performance and safety hazards.

#	Item	Description	Qty
1	OA10074	GOLD-PLATED CAST-IRON DOOR OVERLAY	1
1	OA10073	BLACK CAST IRON DOOR OVERLAY	1
1	OA10075	BRUSHED NICKEL CAST IRON DOOR OVERLAY	1
2	30123	SCREW #8 - 32 X 5/8'' PAN QUADREX ZINC	4
3	30450	OSBURN DOOR LOGO	1
4	30124	SCREW #8 - 32 X 5/16'' TRUSS QUADREX ZINC	1
5	AC07868	1/2" BLACK COIL HANDLE	1
6	SE24216	REPLACEMENT DOOR WITH HANDLE AND LATCH WITHOUT GLASS	1
7	AC06900	SILICONE AND BLACK GASKET KIT 5/8'' X 8'	1
8	AC07900	DOOR HANDLE AND LATCH KIT	1
9	AC09185	DOOR LATCH KIT	1
10	30101	SPRING TENSION PIN 5/32"Ø X 1 1/2"L	1
11	SE30191	REMPLACEMENT GLASS WITH GASKET 11 13/16" X 15 7/8"	1
12	AC06400	3/4" (FLAT) X 6' BLACK SELF-ADHESIVE GLASS GASKET	1
13	PL30192	GLASS FRAME	2
14	SE53585	GLASS RETAINER KIT WITH SCREWS (12 PER KIT)	1
15	PL34035	ASH SHELF	1
16	AC01383	BLACK CAST IRON LEG KIT WITH ASH PAN	1
16	AC01384	BRUSHED NICKEL CAST IRON LEG KIT AND ASH PAN	1
16	AC01386	GOLD-PLATED CAST-IRON LEG KIT WITH ASH PAN	1
17	SE30186	ASH DRAWER FOR OSBURN 2300 ON LEGS	1
18	30141	LEG KIT HARDWARE BAG	1
19	99998	DISCONTINUED	4
19	PL24218-02	NICKEL-PLATED CAST-IRON LEG WITH LEVELING BOLT	4
19	PL24218	BLACK PAINTED CAST IRON LEG WITH LEVELING BLOT	4
20	30050	LEVELING BOLT 3/8-16 X 1 1/2"	4
21	AC01381	5"Ø FRESH AIR INTAKE KIT FOR WOOD STOVE ON LEGS	1
22	AC01382	PEDESTAL AND ASH DRAWER WITH SAFETY LID	1
23	28062	BLACK DRAWER HANDLE 3 25/32"	1
24	30108	MECHANICAL SCREW M4 X 4MM PAN PHILLIPS ZINC	2
25	SE35047	ASH DRAWER	1
26	PL30537	TOP OF BASE	1
27	30418	FINISHING PLUG 3/8"	4
28	30096	1/4-20 X 3/4" ZINC CARRIAGE BOLT	4
29	AC01336	5"Ø FRESH AIR INTAKE KIT FOR WOOD STOVE ON PEDESTAL	1

#	Item	Description	Qty
30	AC07869	3/8" BLACK COIL HANDLE	1
31	SE30536	AIR CONTROL ROD ASSEMBLY	1
32	30060	THREAD-CUTTING SCREW 1/4-20 X 1/2" F HEX STEEL SLOT WASHER C102 ZINC	3
33	30206	ZINC WASHER 5/16"ID X 3/4"OD	1
34	30187	STAINLESS WASHER ID 17/64" X OD 1/2"	1
35	PL30532	RIGHT SIDE DECORATIVE PANEL	1
36	PL30531	LEFT SIDE DECORATIVE PANEL	1
37	99999	BUILD TO ORDER	1
38	AC02050	BLOWER ASSEMBLY WITH VARIABLE SPEED CONTROL (UP TO 100 CFM)	1
39	60013	POWER CORD 96" X 18-3 type SJT	1
40	44073	CROSSFLOW BLOWER 115V-60Hz-39W 100 CFM	1
41	44085	RHEOSTAT KNOB	1
42	44087	RHEOSTAT NUT	1
43	44080	RHEOSTAT WITH NUT	1
44	AC05530	THERMODISC KIT	1
45	44046	THERMODISC F110-20F	1
46	SE45800	OSBURN 2300 INSTRUCTION MANUAL KIT	1
47	PL36226	2 5/8" X 9" X 1" X 3 1/2" REFRACTORY BRICK	2
48	24096	ROUND CAST IRON ASH PLUG	1
49	PL36084	4" X 4 1/2'' X 1 1/4'' REFRACTORY BRICK	1
50	PL36102	REFRACTORY BRICK 3 1/4" X 9''	6
51	29011	4'' X 9" X 1 1/4" REFRACTORY BRICK HD	15
52	29020	4 1/2'' X 9'' X 1 1/4'' REFRACTORY BRICK HD	4
53	29001	4'' X 8 1/8'' X 1 1/4'' REFRATORY BRICK HD	2
54	PL56286	BRICK RETAINER	2
55	PL30518	BRICK RETAINER-REAR	2
56	PL30514	FRONT SECONDARY AIR TUBE #4	1
57	PL30515	MIDDLE FRONT SECONDARY AIR TUBE #3	1
58	PL30516	MIDDLE REAR SECONDARY AIR TUBE #2	1
59	PL30517	REAR SECONDARY AIR TUBE #1	1
60	21426	17 3/4'' X 17 15/32'' X 1 1/4'' BAFFLE C-CAST BOARD	1
61	21427	4 3/4'' X 4 3/8'' X 1 1/4'' BAFFLE C-CAST BOARD	2
62	30854	BLACK COUNTER-WEIGHT	1
63	30852	BY-PASS DAMPER ROD	1
64	SE30554	SMOKE BY-PASS DAMPER	1
65	30785	MECHANICAL SCREW 1/4-20 X 3/4'' STAINLESS HEX	2
66	21416	C-CAST BAFFLE 18 1/2'' X 17'' X 1/2''	1
67	PL30583	FLOORED BRICK RETAINER	2
68	AC05959	METALLIC BLACK STOVE PAINT - 342 g (12oz) AEROSOL	1

OSBURN LIMITED LIFETIME WARRANTY

The warranty of the manufacturer extends only to the original retail purchaser and is not transferable. This warranty covers brand new products only, which have not been altered, modified nor repaired since shipment from factory. Proof of purchase (dated bill of sale), model name and serial number must be supplied when making any warranty claim to your OSBURN dealer.

This warranty applies to normal residential use only. Damages caused by misuse, abuse, improper installation, lack of maintenance, over firing, negligence or accident during transportation, power failures, downdrafts, venting problems or under-estimated heating area are not covered by this warranty. The recommended heated area for a given appliance is defined by the manufacturer as its capacity to maintain a minimum acceptable temperature in the designated area in case of a power failure.

This warranty does not cover any scratch, corrosion, distortion, or discoloration. Any defect or damage caused by the use of unauthorized or other than original parts void this warranty. An authorized qualified technician must perform the installation in accordance with the instructions supplied with this product and all local and national building codes. Any service call related to an improper installation is not covered by this warranty.

The manufacturer may require that defective products be returned or that digital pictures be provided to support the claim. Returned products are to be shipped prepaid to the manufacturer for investigation. Transportation fees to ship the product back to the purchaser will be paid by the manufacturer. Repair work covered by the warranty, executed at the purchaser's domicile by an authorized qualified technician requires the prior approval of the manufacturer. All parts and labour costs covered by this warranty are limited according to the table below.

The manufacturer, at its discretion, may decide to repair or replace any part or unit after inspection and investigation of the defect. The manufacturer may, at its discretion, fully discharge all obligations with respect to this warranty by refunding the wholesale price of any warranted but defective parts. The manufacturer shall, in no event, be responsible for any uncommon, indirect, consequential damages of any nature, which are in excess of the original purchase price of the product. A one-time replacement limit applies to all parts benefiting from lifetime coverage. This warranty applies to products purchased after June 1st, 2015.

DESCRIPTION	WARRANTY APPLICATION*	
	PARTS	LABOUR
Combustion chamber (welds only) and cast-iron door frame.	Lifetime	5 years
Ceramic glass (thermal breakage only**), plating (manufacturing defect**) and convector air-mate.	Lifetime	N/A
Surrounds, heat shields, ash drawer, steel legs, pedestal, trims (aluminum extrusions), C-Cast baffle**, vermiculite baffle**, secondary air tubes**, removable stainless steel combustion chamber deflectors and supports.	7 years	N/A
Handle assembly, glass retainers and air control mechanism.	5 years	3 years
Removable carbon steel combustion chamber components.	5 years	N/A
Standard and optional blower, heat sensors, switches, rheostat, wiring and electronics.	2 years	1 year
Paint (peeling**), gaskets, insulation, ceramic fiber blankets, firebricks and other options.	1 year	N/A
All parts replaced under the warranty.	90 days	N/A

Subject to limitations above.** ****Picture required.

Labour cost and repair work to the account of the manufacturer are based on a predetermined rate schedule and must not exceed the wholesale price of the replacement part.

Shall your unit or a component be defective, contact immediately your **OSBURN** dealer. To accelerate processing of your warranty claim, make sure to have on hand the following information when calling:

- Your name, address and telephone number.
- Bill of sale and dealer's name.
- Installation configuration;
- Serial number and model name as indicated on the nameplate fixed to the back of your unit.
- Nature of the defect and any relevant information.

Before shipping your unit or defective component to our plant, you must obtain an Authorization Number from your OSBURN dealer. Any merchandise shipped to our plant without authorization will be refused automatically and returned to sender.