Installation and Operation Manual

OSBURN 2000-I

(**OB02016 Model**)

ENGLISH

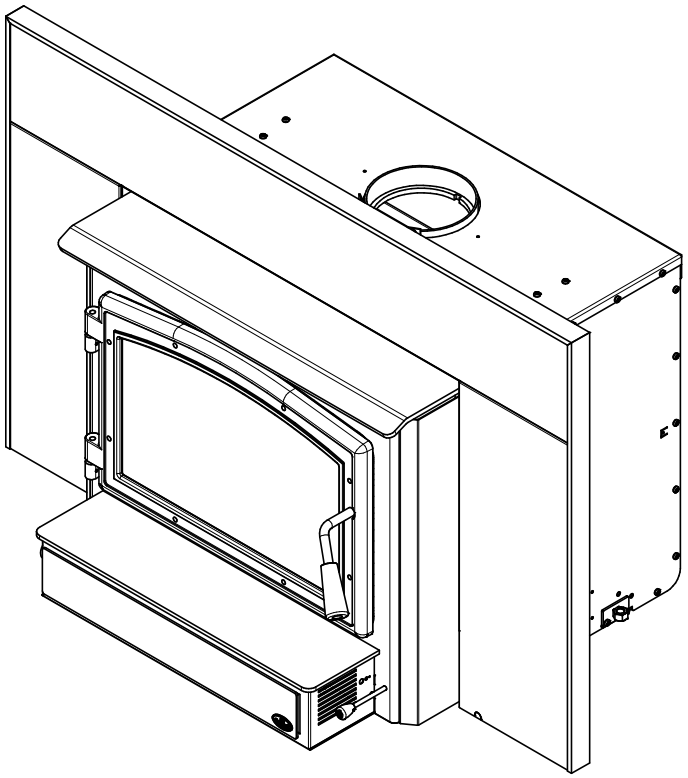

Safety tested according to ULC 628, UL 737 and UL 1482 standards by an accredited laboratory.

EPA ≤2.5 g/h

US Environmental Protection Agency phase II certified wood insert compliant with 2020 cord wood standard

CONTACT LOCAL BUILDING OR FIRE OFFICIALS ABOUT RESTRICTIONS AND INSTALLATION INSPECTION REQUIREMENTS IN LOCAL AREA.

READ THIS ENTIRE MANUAL BEFORE INSTALLATION AND USE OF THIS WOOD INSERT. FAILURE TO FOLLOW THESE INSTRUCTIONS COULD RESULT IN PROPERTY DAMAGE, BODILY INJURY OR EVEN DEATH.

READ AND KEEP THIS MANUAL FOR FUTURE REFERENCE

Printed in Canada

45927A
2026-02-13

ENGLISH

THANK YOU FOR CHOOSING THIS WOOD INSERT.

If this insert is not installed properly, combustible materials near it may overheat and catch fire.

To reduce the risk of fire, follow the installation instructions in this manual.

As one of North America's largest and most respected wood stove and fireplace manufacturers, Stove Builder International takes pride in the quality and performance of all its products.

The following pages provide general advice on wood heating, detailed instructions for safe and effective installation, and guidance on how to get the best performance from this insert.

It is highly recommend that this wood burning hearth product be installed and serviced by professionals who are certified by a «Qualified Agengy» such as NFI (National Fireplace Institute®) or CSIA (Chimney Safety Institute of America) in the United States and in Canada by WETT (Wood Energy Technology Transfer) or in Quebec by APC (Association des Professionnels du Chauffage).

Contact local building or fire officials about restrictions and installation inspection requirements in local area.

A building permit might be required for the installation of this insert and the chimney that it is connected to. It is also recommended to inform your home insurance company.

Please read this entire manual before installing and using this insert.

A primary alternative heat source should be available in the home. This heating unit may serve as a supplementary heat source. The manufacturer cannot be responsible for additional heating costs associated with the use of an alternative heat source.

ONLINE WARRANTY REGISTRATION

If the unit requires repairs during the warranty period, proof of purchase must be provided. The purchase invoice must be kept. The date indicated on it establishes the warranty period. If it can not be provided, the warranty period will be determined by the date of manufacture of the product.

It is also highly recommended to register the warranty online at

https://www.osburn-mfg.com/en/warranty/warranty-registration/

Registering the warranty will help to quickly find the information needed on the unit.

TABLE OF CONTENTS

PART A - OPERATION AND MAINTENANCE 6

1. Safety Information 6

2. General Information 7

2.1 Performances 7
2.2 Specifications 8
2.3 Dimensions 9
2.4 EPA Loading Procedure 11
2.5 Zone Heating and How to Make it Work for You 15
2.6 The Benefits of Low Emissions and High Efficiency 15
2.7 The SBI Commitment to You and the Environment 15

3. Fuel 16

3.1 How to Prepare or Buy Good Firewood 17

4. Operating Your Insert 19

4.1 Before Operating Your Insert 19
4.2 The Use of a Fire Screen. 20
4.3 Blower Operation 20
4.4 Your First Fires 20
4.5 Lighting Fires 20
4.6 Maintaining Wood Fires 21
4.7 Building Different Fires for Different Needs 24

5. Maintaining your wood heating system 26

5.1 Insert Maintenance 26
5.2 Chimney and Chimney Liner Maintenance 28

PART B - INSTALLATION 30

6. Pre-Installation Masonry Fireplace Requirements 30

7. Safety Information 30

7.1 Regulations Covering Insert Installation 31

8. Clearances to Combustible Material 31

8.1 Location of the Certification Label 31
8.2 Masonry Fireplace Throat Damper 32
8.3 Installation of a Combustible Mantel Shelf 32
8.4 Floor Protection 33
8.5 Minimum Masonry Opening and Clearances to Combustibles 36

9. The Venting System 37

9.1 General 37
9.2 Block-off Plate 37
9.3 Suitable Chimneys 37

ENGLISH

9.4 Liner Installation....38
9.5 Chimney Liner Installation....38
9.6 Minimum Chimney Height....40
9.7 The Relationship Between the Chimney and the House....40
9.8 Supply of Combustion Air....41
Appendix 1: Ash Lip and Blower Installation....43
Appendix 2: Door Overlay Installation....44
Appendix 3: Optional Fresh Air Intake Kit Installation....45
Appendix 4: Optional Faceplate And Trims Installation....46
Appendix 5: Log retainers installation....50
Appendix 6: Optional cuttable faceplate installation....51
Appendix 7: Optional Heat Shield Installation....52
Appendix 8: Optional Fire Screen Installation....54
Appendix 9: Installation Of Air Tubes And Baffle....55
Appendix 10: Removal Instructions....57
Appendix 11: Exploded Diagram and Parts List....58
OSBURN LIMITED LIFETIME WARRANTY....61

ENGLISH

Dealer: _____

_____

Installer: _____

_____

Phone Number: _____

Serial Number: _____

CERTIFICATION PLATE

ENGLISH

REFER TO INTERTEK'S DIRECTORY OF BUILDING PRODUCTS FOR DETAILED INFORMATION
SE RÉFÉRER AU RÉPERTOIRE DES PRODUITS HOMOLOGUÉS D'INTERTEK POUR PLUS D'INFORMATION

C ETL US LISTED

Intertek

Control number: 4002461
(March/Mars 2018)

STANDARDS / NORMES D'ESSAI:
Certified to / Certifié selon ULC S628
Certified to / Certifié selon UL 1482
Certified to / Certifié selon UL 737
Certified to/Certifié selon CSA B415.1
Certified to/Certifié selon ASTM E3053
Certified to/Certifié selon ASTM E2515

LISTED SOLID FUEL BURNING INSERT APPLIANCE

APPAREIL ENCASTRABLE À COMBUSTIBLE SOLIDE HOMOLOGUÉ

MODEL / MODÈLE :
OSBURN 2000-I

Serial Number / No. de Série: 1

Clearances to combustibles / Dégagements aux combustibles

Measured from insert body
Mesuré à partir de la chemise de l'encastrable

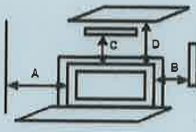

Blower / Ventilateur:
115VOLTS, 0.8 AMPS, 60Hz

Combustible side wall / Mur côté adjacent	A: 16 in./po.	(406 mm)
Combustible side surround [1] / Parement latéral combustible [1]	B: 9 in./po.	(229 mm)
Combustible top surround [1] / Parement supérieur combustible [1]	C: 27 in./po.	(686 mm)
Combustible mantle shelf [1] / Tablette combustible [1]	D: 27 in./po.	(686 mm)
Combustible top surround with shield[1][2] / Parement supérieur combustible avec écran (1)(2)	C': 21 in./po.	(533 mm)
Combustible mantle shelf with shield[1][2] / Tablette combustible avec écran (1)(2)	D': 21 in./po.	(533 mm)

Floor protection / Protection de plancher

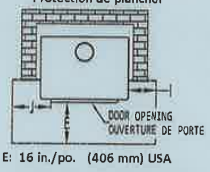

E: 16 in./po. (406 mm) USA
18 in./po. (457 mm) CANADA
I: 8 in./po. (203 mm) CANADA
J: 8 in./po. (203 mm) USA

[1] Subject to a maximum protrusion (consult owner's manual) / Sujet à une saillie maximale (consultez le manuel d'instructions)
[2] Consult owner's manual for additionnal details concerning shield / Pour plus de détails sur l'écran consulter le manuel de l'utilisateur.

PREVENT HOUSE FIRES

- Install and use only in accordance with the manufacturer's installation and operating instructions.
- Contact local building or fire officials about restrictions and installation inspection in your area.
- Use with solid wood fuel only. Do not use other fuels.
- Risk of smoke and flame spillage. Operate only with door closed or door open with screen door installed. Open door or remove screen door only to feed the stove.
- Do not connect this unit to a chimney serving another appliance.
- Install only in masonry fireplaces. Do not remove bricks or mortar from masonry fireplace.
- This stove must be installed as a freestanding heater with the clearances listed in the manufacturer's installation instructions. It is strictly forbidden to install this stove in a factory-built fireplace.
- The non-combustible floor protection in front of the unit should have an R value equal or greater than 1.00 extending 23 inches (584 mm) in front of the insert if the hearth elevation is lower than 5 inches (127 mm) or extend 16 inches (406 mm) (USA), 18 inches (457 mm) (CANADA) without a R value if the hearth elevation is higher than 5 inches (127 mm).
- Connect to a code-approved masonry chimney or listed factory-built fireplace chimney with a direct flue connector into the first chimney liner section.
- Do not overfire. If stove or chimney connector glows, your are overfiring.
- Inspect and clean chimney frequently. Under certain conditions of use, creosote buildup may occur rapidly.
- Do not use grate or elevate fire. Build wood fire directly on hearth.
- Replace glass only with ceramic glass.
- This wood heater needs periodic inspection and repair for proper operation. Consult the owner's manual for further information. It is against US federal regulations to operate this wood heater in a manner inconsistent with the operating instructions in the owner's manual.

PRÉVENEZ LES INCENDIES

- Installer et utiliser conformément au manuel d'utilisation du fabricant.
- Contacter les autorités de votre localité ayant juridiction concernant les restrictions et inspections d'installation.
- Utiliser avec le bois seulement. Ne pas utiliser d'autres combustibles.
- Risque de fuite de fumée et de flammes. Utiliser l'appareil la porte fermée ou ouverte avec le pare-étincelle en place uniquement. Ouvrir la porte ou retirer le pare-étincelle seulement lors du chargement.
- Ne pas raccorder à un conduit de fumée servant déjà pour un autre appareil.
- Installer seulement dans un foyer de maçonnerie. Ne pas enlever les briques ou le mortier du foyer de maçonnerie.
- Ce poêle doit être installé comme appareil de chauffage autonome avec les dégagements indiqués dans les instructions d'installation du fabricant. Il est strictement défendu d'installer ce poêle dans un foyer préfabriqué.
- La protection de plancher incombustible au devant de l'encastrable devrait avoir un facteur d'isolation R égal ou supérieure à 1.00 et se prolonger 23 pouces (584 mm) au devant de l'appareil lorsque l'âtre possède moins de 5 pouces (127 mm) d'élévation et se prolonger 16 pouces (406 mm) (USA), 18 pouces (457 mm) (CANADA), sans facteur d'isolation R au devant de l'encastrable lorsque l'âtre possède plus de 5 pouces (127 mm) d'élévation.
- Raccorder à une cheminée de maçonnerie respectant les codes ou à une cheminée préfabriquée homologuée, directement à la première section de cheminée gainée.
- Ne pas surchauffer. Si l'appareil ou le tuyau rougit, il y a surchauffe.
- Inspecter et nettoyer la cheminée fréquemment. Dans certaines conditions, la formation de créosote peut être rapide.
- Ne pas utiliser de chenets ou de grilles pour élever le feu. Préparer le feu directement sur l'âtre.
- Remplacer la vitre avec un verre de céramique.
- Cet appareil de chauffage requiert des inspections et réparations périodiques. Consulter le manuel de l'utilisateur pour plus d'information. Opérer cet appareil de chauffage de façon inconsistente par rapport au manuel de l'utilisateur consiste une violation de la loi fédérale (USA).

U.S. ENVIRONMENTAL PROTECTION AGENCY Certified to comply with 2020 particulate emission standards using cordwood.
AGENCE DE PROTECTION DE L'ENVIRONNEMENT DES É.-U. Conforme aux normes d'émission de particules de 2020 avec bûche de bois.
Weighted average emission rate: / Moyenne pondérée des émissions: 2.3 g/h
Tested and certified in compliance with CFR 40 part 60, subpart AAA, section 60.534(a)(1(ii))

WARNING: This product can expose you to carbon monoxide, which is known to the State of California to cause cancer, birth defects or other reproductive harm. (For more information go to www.p65warnings.ca.gov)



CAUTION

- HOT WHILE IN OPERATION.
- DO NOT TOUCH. KEEP CHILDREN, CLOTHING AND FURNITURE AWAY.
- CONTACT MAY CAUSE SKIN BURNS. SEE NAME-PLATE AND INSTRUCTIONS.

ATTENTION

- CHAUD EN FONCTIONNEMENT.
- NE PAS TOUCHER. GARDER LES ENFANTS, LES VÊTEMENTS ET LES MEUBLES ÉLOIGNÉS.
- UN CONTACT AVEC LA PEAU PEUT OCCASIONNER DES BRÛLURES. VOIR LES INSTRUCTIONS.

R27720

Made in St-Augustin-de-Desmaures (Qc), Canada
13/10/2022 (# test)

SBI
Fabricant de poêles international
Stove Builder International

Fabriqué à St-Augustin-de-Desmaures (Qc), Canada
13/10/2022 (# test)

PART A - OPERATION AND MAINTENANCE

1. Safety Information

- Operate only with the door fully closed or fully open with the fire screen in place. If the door is left partly open, gas and flame may be drawn out of the opening, creating risks from both fire and smoke.
- **HOT WHILE IN OPERATION, KEEP CHILDREN, CLOTHING AND FURNITURE AWAY. CONTACT MAY CAUSE SKIN BURNS. GLOVES MAY BE NEEDED FOR INSERT OPERATION.**
- Using an insert with cracked or broken components, such as glass or firebricks or baffles may produce an unsafe condition and may damage the insert.
- Open the air control fully before opening the loading door.
- This insert has been tested for use with an open door in conjunction with a fire screen, sold separately. The door may be open, or fire screen removed only during lighting procedures or reloading. Always close the door or put back the fire screen after ignition. Do not leave the insert unattended when the door is opened with or without fire screen.
- **NEVER USE GASOLINE, LANTERN FUEL (NAPHTHA), FUEL OIL, MOTOR OIL, KEROSENE, CHARCOAL LIGHTER FLUID, OR SIMILAR LIQUIDS OR AEROSOLS TO START A FIRE IN THIS INSERT. KEEP ALL SUCH LIQUIDS OR AEROSOLS WELL AWAY FROM THE INSERT WHILE IT IS IN USE.**
- Do not store fuel within heater minimum installation clearances.
- Burn only seasoned natural firewood.
- This wood heater needs periodic inspection and repair for proper operation. It is against federal regulations to operate this wood heater in a manner inconsistent with operating instructions in this manual.
- This appliance should always be maintained and operated in accordance with these instructions.
- Do not elevate the fire by means of grates, andirons or other means.
- A smoke detector, a carbon monoxide detector and a fire extinguisher should be installed in the house. The location of the fire extinguisher should be known by all family members.



This product can expose you to chemicals including carbon monoxide, which is known to the State of California to cause cancer, birth defects or other reproductive harm. For more information go to www.P65warnings.ca.gov/

2. General Information

2.1 Performances

Values are as measured per test method, except for the recommended heating area, firebox volume, maximum burn time and maximum heat output.

Model	Osburn 2000-I (OB02016)	
Combustion Technology	Non catalytic	
Fuel Type	Dry Cordwood	
Recommended heating area (sq. ft.)[1]	500 to 2,100 ft^2 (47 to 195 m^2)	
Overall Firebox volume[2]	2.4 ft^3 (0.068 m^3)	
EPA loading volume	1.95 ft^3 (0.055 m^3)	
Maximum burn time[1]	8 hours	
Maximum heat output (dry cordwood)[3]	75,000 BTU/h (22 kW)	
Overall heat output rate (min. to max.)[2 4]	14,200 BTU/h to 44,500 BTU/h (4.16 kW to 13.04 kW)	
Average overall efficiency[3] Dry cordwood	72 % (HHV)[5]	77 % (LHV)[6]
Optimum overall efficiency[7]	79 %	
Optimum heat transfer efficiency[8]	76 %	
Average particulate emissions rate[9]	2.3 g/h (EPA / CSA B415.1-10)[10]	
Average CO[11]	69 g/h	

[1] Recommended heating area and maximum burn time may vary subject to location in home, chimney draft,heat loss factors, climate, fuel type and other variables. The recommended heated area for a given appliance is defined by the manufacturer as its capacity to maintain a minimum acceptable temperature in the designated area in case of a power failure.

[2] The overall firebox calculation is an approximation and is not intended to be used for loading. This volume includes a buffer zone to allow an easier fuel insertion, prevent ash spillage and allow the air wash to work properly.

[3] The maximum heat output (dry cordwood) is based on a loading density varying between 15 lb/ft^3 and 20 lb/ft^3. Other performances are based on a fuel load prescribed by the standard. The specified loading density varies between 7 lb/ft^3 and 12 lb/ft^3. The moisture content is between 19% and 25%.

[4] As measured per CSA B415.1-10 stack loss method.

[5] Higher Heating Value of the fuel.

[6] Lower Heating Value of the fuel.

[7] Optimum overall efficiency at a specific burn rate (LHV).

[8] The optimum heat transfer efficiency is for the low burn rate and represents the appliance's ability to convert the energy contained in the wood logs into energy transferred to the room in the form of heat and does not take into account the chemical losses during combustion.

[9] This appliance is officially tested and certified by an independent agency.

[10] Tested and certified in compliance with CFR 40 part 60, subpart AAA, section 60.534(a)(1(ii) and ASTM E3053-17. Based on ALT-125 sent by EPA on February 28th, 2018.

[11] Carbon monoxide.

2.2 Specifications

Recommended log length	16 in (406 mm) east-west
Maximum log length[1]	20 in (508 mm) east-west
Flue outlet diameter	6 in (150 mm)
Recommended connector pipe diameter	6 in (150 mm)
Type of chimney	ULCS-635, CAN/ULC-S640, UL 1777
Minimum chimney height	12 feet
Baffle material	C-Cast or equivalent
Approved for alcove installation	No
Approved for mobile home installation[2]	No
Type of door	Simple, glass with cast iron frame
Type of glass	Ceramic glass
Blower	Included (up to 144 CFM)
Particulate emission standard	EPA / CSA B415.1-10[3]
USA standard (Safety)	UL 1482, UL 737
Canada standard (Safety)	ULC-628

[1]East-west: through the door you see the longitudinal sides of the logs; north-south: through the door you see the tips of the logs.

[2] Mobile home (Canada) or manufactured home (USA): The US department of Housing and Urban Development describes “manufactured homes” better known as “mobile homes” as followed; buildings built on fixed wheels and those transported on temporary wheels/axles and set on a permanent foundation. In Canada, a mobile home is a dwelling for which the manufacture and assembly of each component is completed or substantially completed prior to being moved to a site for installation on a foundation and connection to service facilities and which conforms to the CAN/CSA-Z240 MH standard.

[3]Tested and certified in compliance with CFR 40 part 60, subpart AAA, section 60.534(a)(1(ii) and ASTM E3053-17. Based on ALT-125 sent by EPA on February 28th, 2018.

2.3 Dimensions

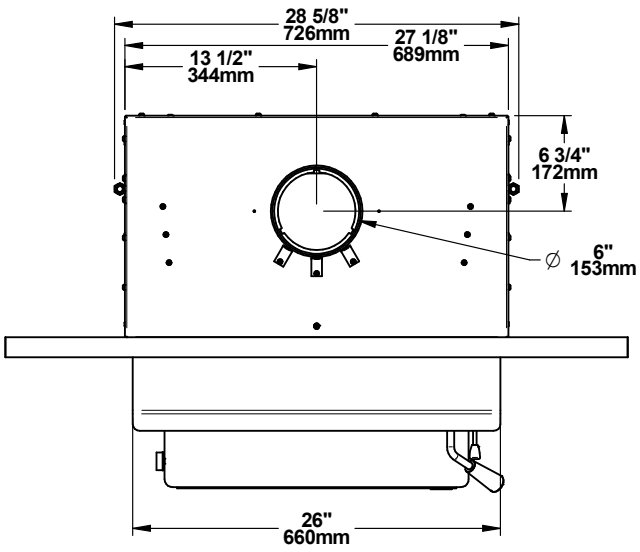

Figure 1: Top View

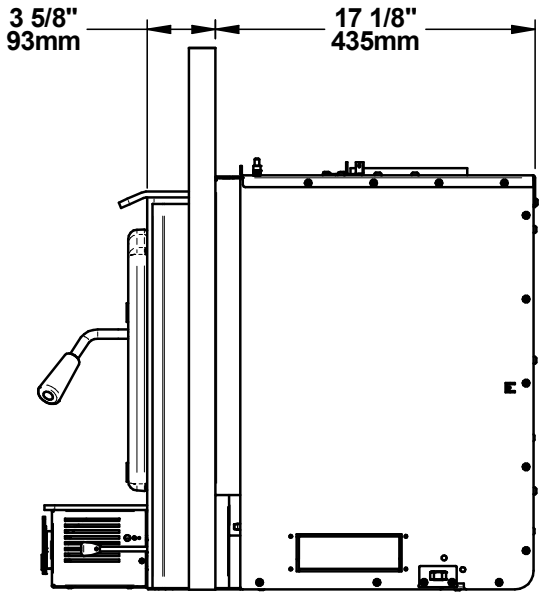

Figure 2: Side View - Minimum Insert Projection

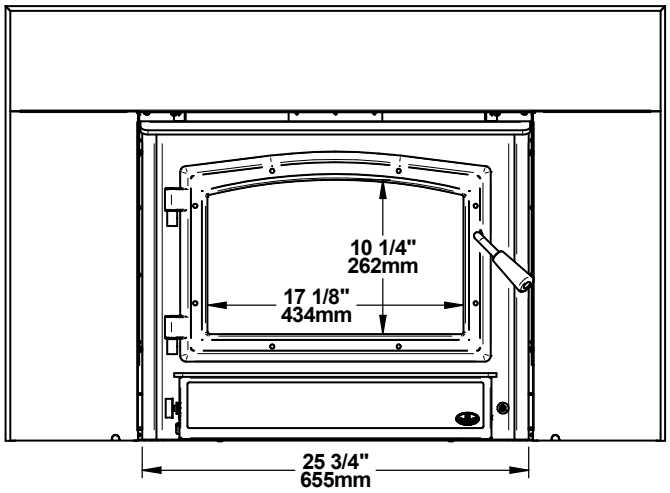

Figure 3: Front View

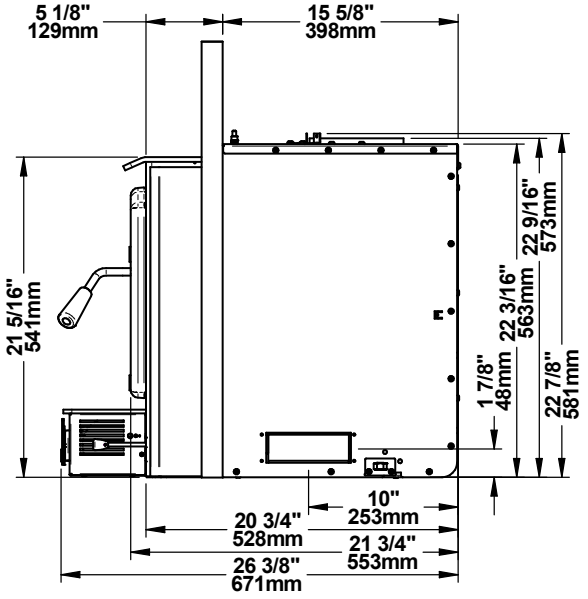

Figure 4: Side View - Maximum Insert Projection

ENGLISH

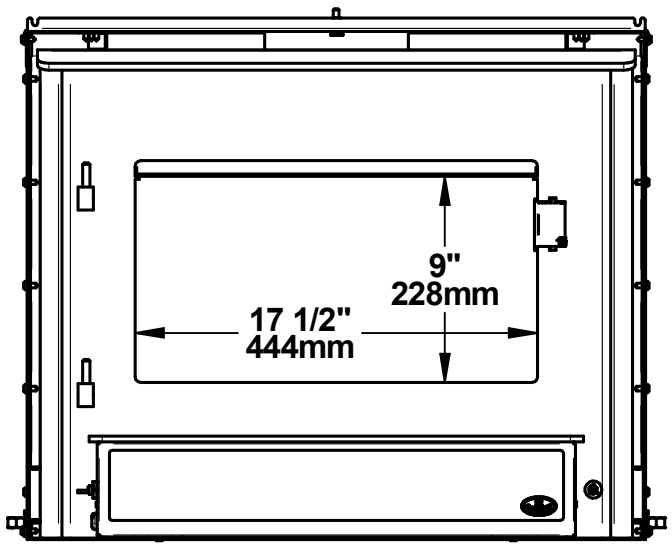

Figure 5: Door Opening

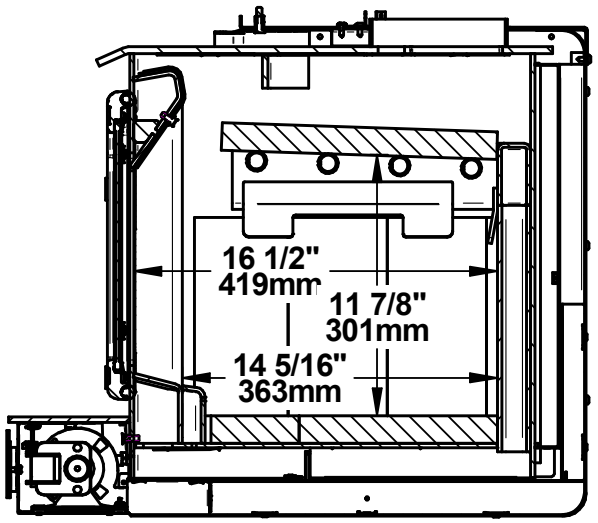

Figure 6: Side Firebox

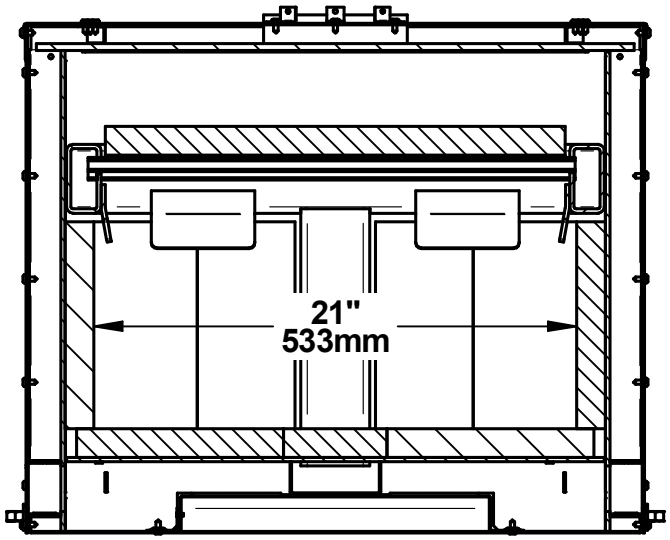

Figure 7: Front Firebox

2.4 EPA Loading Procedure

The best loading method for efficient and clean combustion with this fireplace is the EPA loading method. The images below show the space in the firebox where the logs are to be placed. It is important to always respect this space and not to put logs in the grid area marked with an X. The marked area is defined by the space between the glass and primary air channel. Leave enough space between the logs for good air circulation. Using more than the usable firebox volume for loading wood will result in poor combustion. The Usable firebox volume of 1.95 ft^3 shown below is the one used during EPA emissions certification. The log length recommended for this stove is 16 inches and the EPA testing were done with log length of 16 in. The fuel specie used for the EPA certification was beech.

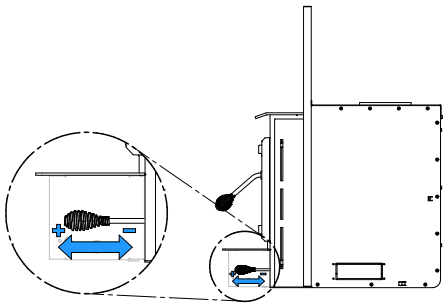

2.4.1 Air control

The air control is located underneath the ash shelf. To open the air control, pul the air control handle completely (High). This will increase the burn rate. To close the air control, push the air control handle completely. This will permit to achieve the lowest possible burn rate.

2.4.2 High burn rate (primary air control open)

For Kindling and Start-up fuel configuration refer to the pictures below. Split the start-up fuel log into 8 pieces. Crisscross at 45 degrees the 8 pieces on the brick on 2 rows and leaving some space between each wood pieces. Crisscross at 45 degrees the kindling on the top of the start-up fuel on 3 rows, from biggest to smallest. The kindling is made of between 10-16 small pieces that are about 10% of moisture content. Place 5 newspaper sheets on top of the kindling. Light up the paper and let the door at 90 degrees between one minute and one minute and 30 seconds, then close the door. Air control is fully open.

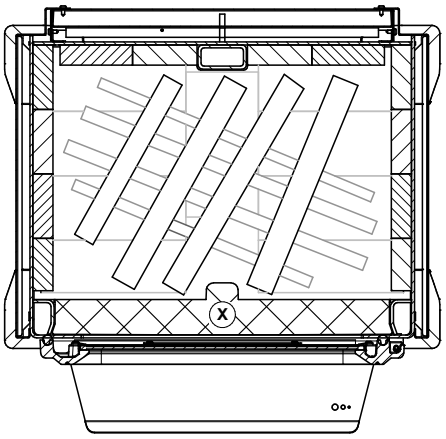

Figure 8: Start-up fuel

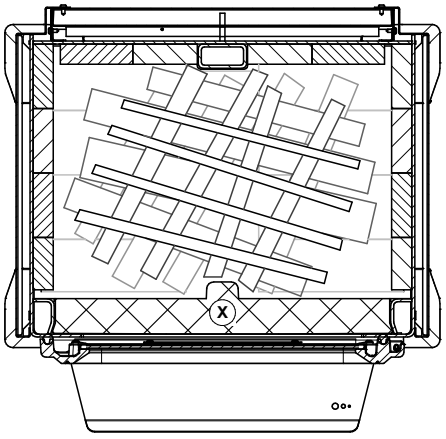

Figure 9: Kindling

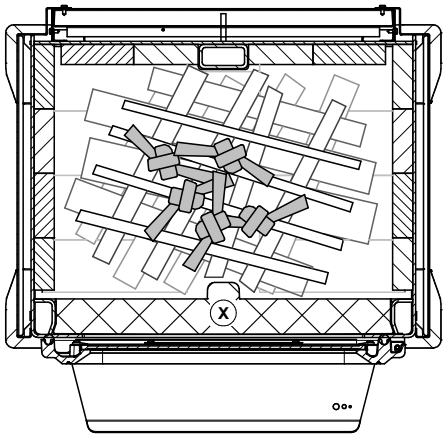

Figure 10: Newspaper

When there are only faint flames remaining and most of the wood is turned into coal, break ashes and level coal bed. Close the door.

Add High Fire load in an East-West configuration. Put 3 first pieces on the coal bed without air space between them. Leave about 1 inch of air space between the rear firebrick and the first piece. See Figure 11 and 12 for an example of high burn load inside the firebox. The front (3rd) piece should stand off on the steel andirons by approximately 1-2 inches. The 2 other pieces should be added on top of the first 3, stacked in the middle, in an East-West orientation. Let the

door open at 90 degrees between one minute and one minute and 30 seconds. Close the door, start the blower at maximum speed, and let burn until the weight is down to target.

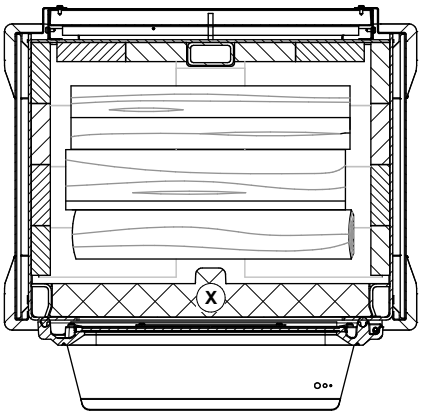

Figure 11: Position of the bottom pieces (High burn)

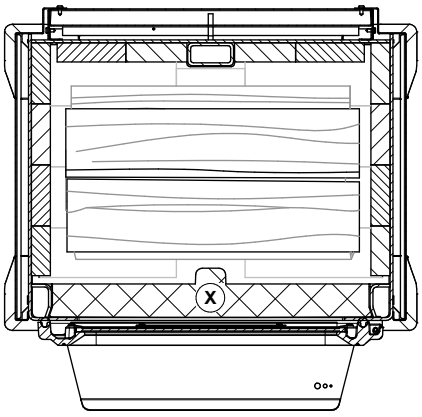

Figure 12: Position of the two top pieces (High burn)

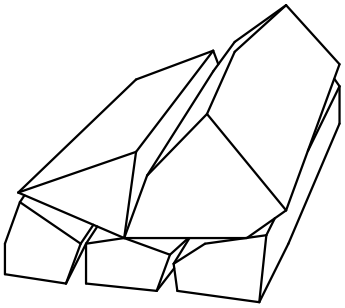

Figure 13: Example high burn load (side view)

For optimal loading of a high fire, take small to medium size fuel pieces (between 2- and 3-inches cross section dimensions approximately) on the bottom and use medium to large size fuel pieces (3.5 to 4.5 inches of cross section dimensions approximately) on top. To make sure combustion is equal, put the biggest piece on top of the first three, at the front of the firebox. See an example of high burn load in the Figure 13 above.

2.4.3 Low burn rate

After the high fire, if there is visible yellow flame, close the air control. When the charcoal bed weight is between 14 and 17% of the low fire load weight, turn off the blower, open the door, stir the coals slightly, just enough to have a level plane coal bed, and let the door remain slightly open for 1 minute before loading the low burn test fuel.

For the loading, put 3 first pieces on the coal bed in an East-West orientation. Leave approximately 1 inch to 2 inches of air space between the rear firebrick and the first piece. There should be air space between all pieces. The front (3rd) piece may contact the steel andirons. The 2 top pieces (fourth and fifth) should be added on top of the first 3, slightly angled (20° from the 3 wood pieces at the bottom). The distance between the logs should be approximately 1 inch. See Figure 14 and 15 for an example of low burn load inside the firebox.

For optimal low fire load, use medium to large size fuel pieces (between 4- and 5.5-inches cross section dimensions approximately) on the bottom and use small to medium size fuel pieces (2.5 to 4 inches cross section dimensions approximately) on top. To make sure combustion is equal, put the smallest piece on top of the first three, at the back of the firebox (see Figure 16 for an example of low burn load).

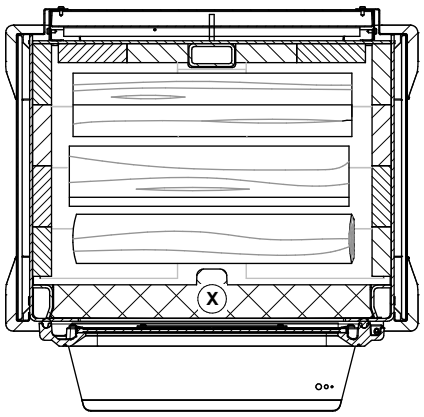

Figure 14: Position of the bottom pieces (Low burn)

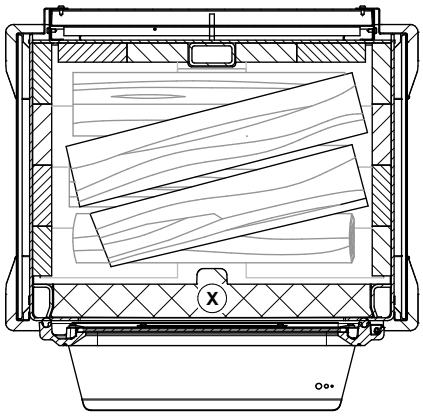

Figure 15: Position of the two top pieces (Low burn)

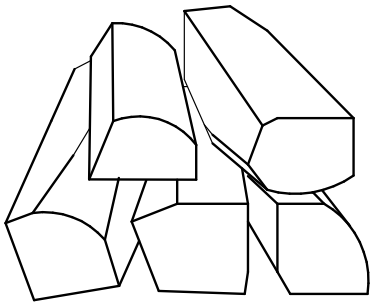

Figure 16: Example low burn load (side view)

Let the door ajar at 90° until the flames roll on top of the fuel (between 2:00 and 4:00 minutes) and then close the door with the primary air control open. See picture below for rolling flame:



Close the primary air control by small increments (ex: 1/16 of an inch), from ½" to fully closed, between 4 and 15 minutes after the loading period. Before closing further, make sure the flame intensity is increasing or stable. Close the air control completely. Turn ON the blower at maximum speed.

2.4.4 Medium burn rate

After the high fire, if there is visible yellow flame, close the air control. When the charcoal bed After the high fire, if there is visible yellow flame, close the air control. When the charcoal bed weight is between 14 and 17% of the medium fire load weight, turn off the blower, open the door, stir the coals slightly, just enough to have a level plane coal bed, and let the door remain slightly open for 1 minute before loading the medium burn test fuel.

For the loading, put 3 first pieces on the coal bed in an East-West orientation. Leave about 1 to 2 inches of air space between the rear firebrick and the first piece. The front (3rd) piece may contact the steel andirons. The 2 top pieces (fourth and fifth) should be added on top of the first 3, slightly angled (20° from horizontal, top view). The distance between the logs should be approximately 1 inch. See Figure 17 and 18 for an example of medium burn load inside the firebox.

For optimal medium fire load, use medium to large size fuel pieces (between 4- and 5.5-inches cross section dimensions approximately) on the bottom and use small to medium size fuel pieces (2.5 to 4 inches cross section dimensions approximately) on top. To make sure combustion is

equal, put the smallest piece on top of the first three, at the back of the firebox (see Figure 19 for an example of medium burn load).

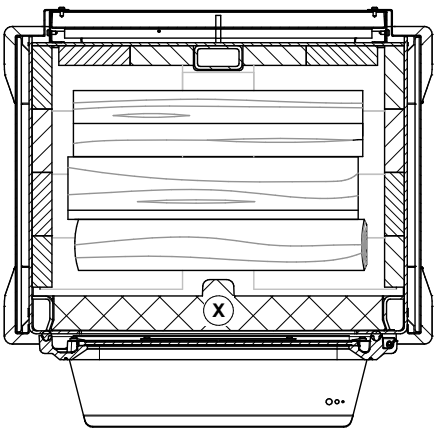

Figure 17: Position of the bottom pieces (Medium burn)

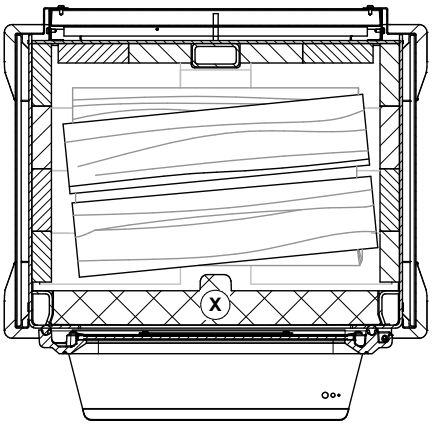

Figure 18: Position of the two top pieces (Medium burn)

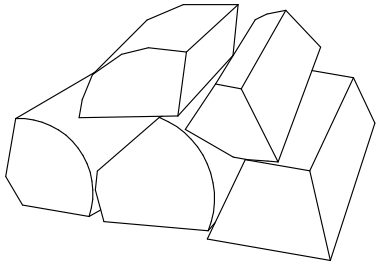

Figure 19: Example medium burn load (side view)

Let the door ajar at 90° until the flames roll on top of the fuel (between 2:30 and 5:00) and then close the door with the primary air control open. See picture below for rolling flame:



Close the primary air control by small increments (ex: 1/16 of an inch) until reaching the mid-point of air control position, between 4 and 15 minutes after the loading period. Before closing further, make sure the flame intensity is increasing or stable. Turn ON the blower at maximum speed

2.5 Zone Heating and How to Make it Work for You

Your new wood insert is a space heater, which means it is intended to heat the area it is installed in, as well as spaces that connect to that area, although to a lower temperature. This is called zone heating and it is an increasingly popular way to heat homes or spaces within homes.

Zone heating can be used to supplement another heating system by heating a particular space within a home, such as a basement, a family room or an addition that lacks another heat source.

Houses of moderate size and relatively new construction can be heated with a properly sized and located wood insert. Whole house zone heating works best when the insert is in the part of the house where the family spends most of its time. This is normally the main living area where the kitchen, dining and living rooms are located. By locating the insert in this area, you will get the maximum benefit of the heat it produces and will achieve the highest possible heating efficiency and comfort. The space where you spend most of your time will be warmest, while bedrooms and basement (if there is one) will stay cooler. In this way, you will burn less wood than with other forms of heating.

Although the insert may be able to heat the main living areas of your house to an adequate temperature, we strongly recommend that you also have a conventional oil, gas or electric heating system to provide backup heating.

Your success with zone heating will depend on several factors, including the correct sizing and location of the insert, the size, layout and age of your home and your climate zone. Three-season vacation homes can usually be heated with smaller inserts than houses that are heated all winter.

2.6 The Benefits of Low Emissions and High Efficiency

The low smoke emissions produced by the special features inside this insert firebox mean that your household will release up to 90% less smoke into the outside environment than if you used an older conventional stove. But there is more to the emission control technologies than protecting the environment.

The smoke released from wood when it is heated contains about half of the energy content of the fuel. By burning the wood completely, your insert releases all the heat energy from the wood instead of wasting it as smoke up the chimney. Also, the features inside the firebox allow you to reduce the air supply to control heat output, while maintaining clean and efficient flaming combustion, which boosts the efficient delivery of heat to your home.

The emission control and advanced combustion features of your insert can only work properly if your fuel is in the correct moisture content range of 15% to 20%. See section «3. Fuel» of this manual for suggestions on preparing fuelwood and judging its moisture.

2.7 The SBI Commitment to You and the Environment

The SBI team is committed to protecting the environment, so we do everything we can to use only materials in our products that will have no lasting negative impact on the environment.

2.7.1 What is Your New Insert Made Of?

The **body** of your insert, which is most of its weight, is carbon steel. Should it ever become necessary many years in the future, almost the entire insert can be recycled into new products, thus eliminating the need to mine new materials.

The **paint** coating on your insert is very thin. Its VOC content (Volatile Organic Compounds) is very low. VOCs can be responsible for smog, so all the paint used during the manufacturing process meets the latest air quality requirements regarding VOC reduction or elimination.

The **air tubes** are stainless steel, which can also be recycled.

The C-Cast **baffle** is made of an aluminosilicate fibre material that is compressed with a binder to form a rigid board. C-Cast can withstand temperatures above 2,000 °F. It is not considered hazardous waste. Disposal at a landfill is recommended.

Firebrick is mainly composed of silicon dioxide, also known as silica, a product processed from a mined mineral. It is most commonly found in nature in the form of sand and clay. Disposal at a landfill is recommended.

The door and glass **gaskets** are fibreglass which is spun from melted sand. Black gaskets have been dipped into a solvent-free solution. Disposal at a landfill is recommended.

The door **glass** is a 4 mm thick ceramic material that contains no toxic chemicals. It is made of natural raw materials such as sand and quartz that are combined in such a way to form a high temperature glass. Ceramic glass cannot be recycled in the same way as normal glass, so it should not be disposed of with your regular household products. Disposal at a landfill is recommended.

3. Fuel

MATERIALS THAT SHOULD NOT BE BURNED

- **COAL;**
- **GARBAGE;**
- **LAWN CLIPPINGS OR YARD WASTE;**
- **MATERIALS CONTAINING RUBBER, INCLUDING TIRES;**
- **MATERIALS CONTAINING PLASTIC;**
- **WASTE PETROLEUM PRODUCTS, PAINTS OR PAINT THINNERS, OR ASPHALT PRODUCTS;**
- **MATERIALS CONTAINING ASBESTOS;**
- **CONSTRUCTION OR DEMOLITION DEBRIS;**
- **RAILROAD TIES OR PRESSURE-TREATED WOOD;**
- **MANURE OR ANIMAL REMAINS;**
- **SALT WATER DRIFTWOOD OR OTHER PREVIOUSLY SALT WATER SATURATED MATERIALS;**
- **UNSEASONED WOOD; OR**
- **PAPER PRODUCTS, CARDBOARD, PLYWOOD, OR PARTICLEBOARD. THE PROHIBITION AGAINST BURNING THESE MATERIALS DOES NOT PROHIBIT THE USE OF FIRE STARTERS MADE FROM PAPER, CARDBOARD, SAW DUST, WAX AND SIMILAR SUBSTANCES FOR THE PURPOSE OF STARTING A FIRE IN AN AFFECTED WOOD HEATER.**

BURNING THESE MATERIALS MAY RESULT IN RELEASE OF TOXIC FUMES OR RENDER THE HEATER INEFFECTIVE AND CAUSE SMOKE.

3.1 How to Prepare or Buy Good Firewood

3.1.1 What is Good Firewood?

Good firewood has been cut to the correct length for the insert, split to a range of sizes and stacked in the open until its moisture content is reduced to 15 to 20 per cent.

3.1.2 Tree Species

The tree species the firewood is produced from is less important than its moisture content. The main difference in firewood from various tree species is the density of the wood. Hardwoods are denser than softwoods. People who live in the coldest regions of North America usually have only spruce, birch and poplar, other low-density species to burn and yet they can heat their homes successfully.

Homeowners with access to both hardwood and softwood fuel sometimes use both types for different purposes. For example, softer woods make good fuel for relatively mild weather in spring and fall because they light quickly and produce less heat softwoods are not as dense as hardwoods so a given volume of wood contains less energy. Using softwoods avoids overheating the house, which can be a common problem with wood heating in moderate weather. Harder woods are best for colder winter weather when more heat and longer burn cycles are desirable.

Note that hardwood trees like oak, maple, ash and beech are slower growing and longer lived than softer woods like poplar and birch. That makes hardwood trees more valuable. The advice that only hardwoods are good to burn is outdated. Old, leaky cast iron stoves wouldn't hold a fire overnight unless they were fed large pieces of hardwood. That is no longer true. You can successfully heat your home by using the less desirable tree species and give the forest a break at the same time.

3.1.3 Log Length

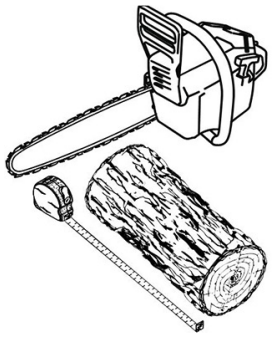

Logs should be cut at least 1" (25 mm) shorter than the firebox so they fit in easily. Pieces that are even slightly too long make loading the insert very difficult. The most common standard length of firewood is 16" (400 mm).

The pieces should be a consistent length, with a maximum of 1" (25 mm) variation from piece to piece.

3.1.4 Piece Size

Firewood dries more quickly when it is split. Large unsplit rounds can take years to dry enough to burn. Even when dried, unsplit logs are difficult to ignite because they don't have the sharp edges where the flames first catch. Logs as small as 3" (75 mm) should be split to encourage drying.

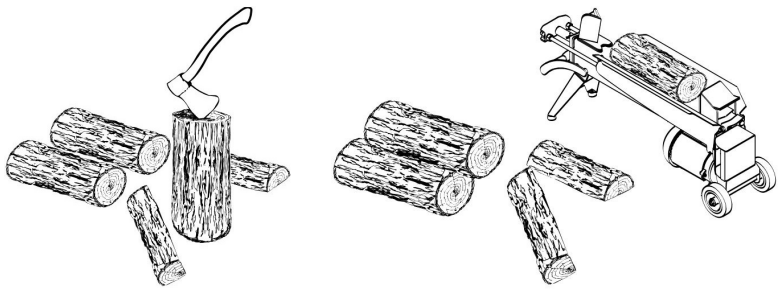

Wood should be split to a range of sizes, from about 3" to 6" (75 mm to 150 mm) in cross section. Having a range of sizes makes starting and rekindling fires much easier.

Often, the firewood purchased from commercial suppliers is not split finely enough for convenient stoking. It is sometimes advisable to resplit the wood before stacking to dry.

3.1.5 How to Dry Firewood

Firewood that is not dry enough to burn is the cause of most complaints about wood inserts. Continually burning green or unseasoned wood produces more creosote and involves lack of heat and dirty glass door. See Section «5. Maintaining your wood heating system» for concerns about creosote.

Here are some things to consider in estimating drying time:

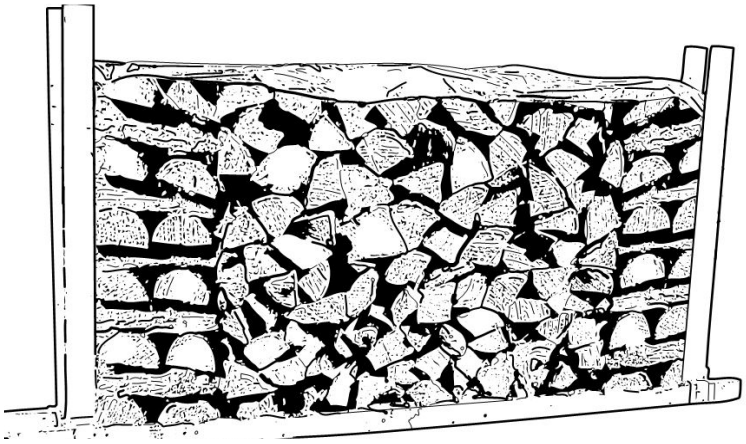

- Firewood takes a long time to dry;
- Firewood bought from a dealer is rarely dry enough to burn, so it is advisable to buy the wood in spring and dry it yourself;
- Drying happens faster in dry weather than in damp, maritime climates;
- Drying happens faster in warm summer weather than in winter weather;
- Small pieces dry more quickly than large pieces;
- Split pieces dry more quickly than unsplit rounds;
- Softwoods take less time to dry than hardwoods;
- Softwoods like pine, spruce, and poplar/aspen can be dry enough to burn after being stacked in the open for only the summer months;
- Hardwoods like oak, maple and ash can take one, or even two years to dry fully, especially if the pieces are big;
- Firewood dries more quickly when stacked in the open where it is exposed to sun and wind; it takes much longer to dry when stacked in a wood shed;
- Firewood that is ready to burn has a moisture content between15 and 20% by weight and will allow your insert to produce its highest possible efficiency.

3.1.6 Judging Firewood Moisture Content

You can find out if some firewood is dry enough to burn by using these guidelines:

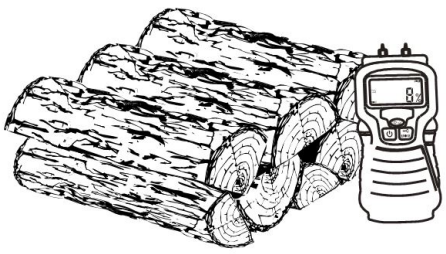

- Cracks form at the ends of logs as they dry,
- As it dries in the sun, the wood turns from white or cream colored to grey or yellow,
- Bang two pieces of wood together; seasoned wood sounds hollow and wet wood sounds dull,
- Dry wood is much lighter in weight than wet wood,
- Split a piece, and if the fresh face feels warm and dry it is dry enough to burn; if it feels damp, it is too wet,
- Burn a piece; wet wood hisses and sizzles in the fire and dry wood does not.

You could buy a wood moisture meter to test your firewood.

3.1.7 Manufactured Logs

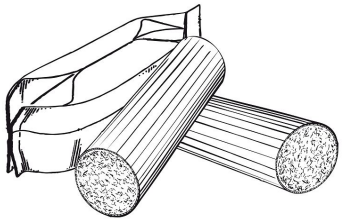

Do not burn manufactured logs made of wax impregnated sawdust or logs with any chemical additives. Manufactured logs made of 100% compressed sawdust can be burned, but use caution in the number of these logs burned at one time. Start with one manufactured log and see how the insert reacts. Never use more than two manufactured logs.

4. Operating Your Insert

This wood heater has a manufacturer-set minimum low burn rate that must not be altered. It is against federal regulations to alter this setting or otherwise operate this wood heater in a manner inconsistent with operating instructions in this manual.

4.1 Before Operating Your Insert

Before using the insert, the following items should be installed :

- Ash lip and blower (See «Appendix 1: Ash Lip and Blower Installation», page 43),
- Overlay (See «Appendix 2: Door Overlay Installation», page 44),
- Optional Faceplate (See «Appendix 4: Optional Faceplate And Trims Installation», page 46),
- Air control knob.

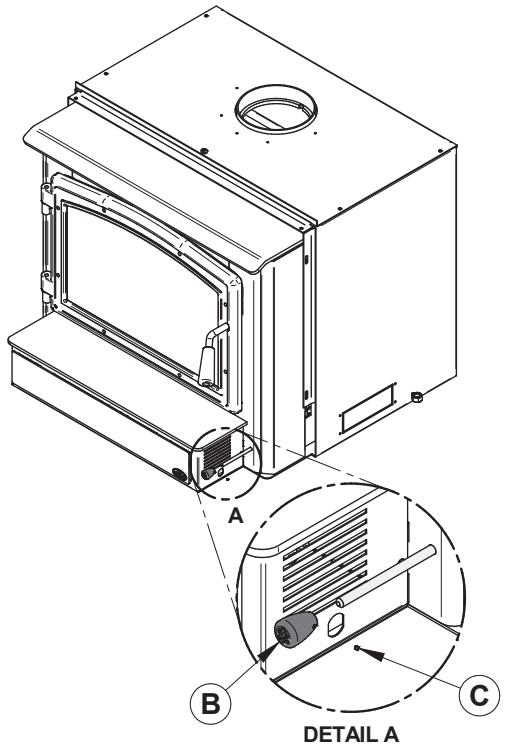

Figure 20: Installing air control knob **(B)** with screw **(C)**

4.2 The Use of a Fire Screen.

In the United States or in provinces with a particulate emission limit (eg US EPA), the use of wood stoves with open door with and fire screen is prohibited.

This stove has been tested for use with an open door in conjunction with a fire screen, sold separately. Make sure the fire screen is properly secured on the stove to avoid any risk of fire. When the fire screen is in use, it is important not to leave the stove unattended to respond promptly in the event of smoke spillage into the room. Potential causes of smoke spillage are described in Section «9. The Venting System» of this manual. See «Appendix 8: Optional Fire Screen Installation» for installation instructions.

4.3 Blower Operation

Ensure the blower cord is not in contact with any surface of the insert to prevent electrical shock or fire damage. Do not run cord beneath the insert.

The blower has a rheostat that can be adjusted in three different positions; either from high (HI) to low (LO) or closed (OFF).

Allow the insert to reach operating temperature (approximately one hour) before turning on the blower, since increased airflow from the blower will remove heat and affect the start up combustion efficiency.

Since your insert's blower is equipped with a heat sensor, when the blower is ON, the blower will start automatically when the insert is hot enough and it will stop when the insert has cooled down. Therefore, you can leave the blower speed control at the desired setting.

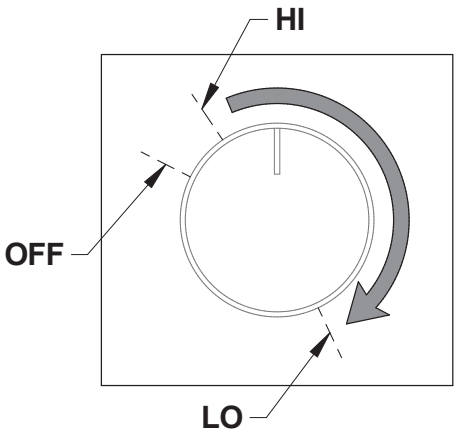

Figure 21: Blower operation

4.4 Your First Fires

Two things will happen as you burn your first few fires; the paint cures and the internal components of the insert are conditioned.

As the paint cures, some of the chemicals vaporize. The vapors are not poisonous, but they do smell bad. Fresh paint fumes can also cause false alarms in smoke detectors. So, when you first light your insert, be prepared by opening doors and/or windows to ventilate the house. As you burn hotter and hotter fires, more of the painted surfaces reach the curing temperature of the paint. The smell of curing paint does not disappear until you have burned one or two very hot fires.

Burn one or two small fires to begin the curing and conditioning process. Then build bigger and hotter fires until there is no longer paint smell from the insert.

4.5 Lighting Fires

Each person who heats with wood develops their own favorite way to light fires. Whatever method you choose, your goal should be to get a hot fire burning quickly. A fire that starts fast produces less smoke and deposits less creosote in the chimney. Here is one popular and effective way to start wood fires.

4.5.1 Conventional Fire Starting

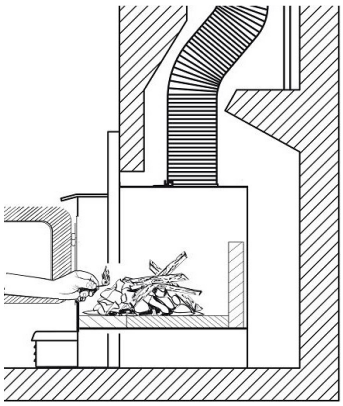

The conventional method for starting a wood fire is the top-down fire. To light it properly, you'll need about ten small pieces of wood (approximately 1 inch in diameter) and 5 medium-sized pieces (2-3 inches in diameter). Start by placing two small pieces on each side of the combustion chamber. Crumple 5 to 10 sheets of newspaper and place them between the two small pieces of wood. Cross the remaining small pieces over the newspaper. For better ignition, leave space for the newspaper and avoid crushing it with the wood pieces. Also, leave space between each piece of wood. Next, place the 5 larger pieces on top of the smaller pieces of wood in two layers, crossing them (Refer to the attached images for examples of wood stacking). Open the air intake control completely and light the newspaper. The free flow of flames around each piece of wood and the absence of smoke indicate a quality ignition. Leave the door slightly ajar for about 5 minutes. When the fire is well lit, close the door while keeping the air intake control open. When the small kindling wood is almost completely burned and the medium-sized pieces are still burning, it's time to add larger pieces of wood until the fire is well established.

DO NOT LEAVE THE INSERT UNATTENDED WHEN THE DOOR IS SLIGHTLY OPENED. ALWAYS CLOSE AND LATCH THE DOOR AFTER THE FIRE IGNITES.

4.5.2 Using Fire Starters

Many people like to use commercial fire starters instead of newspaper. Some of these starters are made of sawdust and wax and others are specialized flammable solid chemicals. Follow the package directions for use.

Gel starter may be used but only if there are no hot embers present. Use only in a cold firebox to start a fire.

DO NOT USE FLAMMABLE LIQUIDS SUCH AS GASOLINE, NAPHTHA, FUEL OIL, MOTOR OIL, OR AEROSOLS TO START OR REKINDLE THE FIRE.

4.6 Maintaining Wood Fires

4.6.1 General Advice

Wood heating with a space heater is very different than other forms of heating. There will be variations in the temperature in different parts of the house and there will be variations in temperature throughout the day and night. This is normal, and for experienced wood burners these are advantages of zone heating with wood.

Do not expect steady heat output from your insert. It is normal for its surface temperature to rise after a new load of wood is ignited and for its temperature to gradually decline as the fire progresses. This rising and falling of temperature can be matched to your household routines. For example, the area temperature can be cooler when you are active, such as when doing housework or cooking, and it can be warmer when you are inactive, such as when reading or watching television.

Wood burns best in cycles. A cycle starts when a new load of wood is ignited by hot coals and ends when that load has been consumed down to a bed of charcoal about the same size as it was when the wood was loaded. Do not attempt to produce a steady heat output by placing

a single log on the fire at regular intervals. Always place at least three, and preferably more, pieces on the fire at a time so that the heat radiated from one piece helps to ignite the pieces next to it. Each load of wood should provide several hours of heating. The size of each load can be matched to the amount of heat needed.

When you burn in cycles, you rarely need to open the insert's loading door while the wood is flaming. This is an advantage because there is more chance that smoke will leak from the insert when the door is opened as a full fire is burning.

If you must open the door while the fuel is flaming, open the air control fully for a few minutes, then unlatch and open the door slowly. (See section «4.6.5 Controling the Air Supply»)

4.6.2 Ash Removal

Ash should be removed from the firebox every two or three days of full time heating. Do not let the ash build up in the firebox because it will interfere with proper fire management.

The best time to remove ash is after an overnight fire when the insert is relatively cool, but there is still some chimney draft to draw the ash dust into the insert and prevent it from coming into the room.

After ashes have been removed from the insert and placed in a tightly covered metal container, they should be taken outside immediately. The closed container of ashes should be placed on a non-combustible floor or on the ground well away from all combustible materials pending final disposal. Ashes normally contain some live charcoal that can stay hot for several days. If the ashes are disposed of by burial in soil or otherwise locally dispersed, they should be retained in the closed container until all cinders have thoroughly cooled. Other waste should not be placed in this container.

NEVER STORE ASHES INDOORS OR IN A NON-METALIC CONTAINER OR ON A WOODEN DECK.

4.6.3 Raking Charcoal

Rekindle the fire when you notice that the room temperature has fallen. You will find most of the remaining charcoal at the back of the firebox, furthest from the door.

Rake these coals towards the door before loading. There are two reasons for this raking of the coals. First, it concentrates them near where most of the combustion air enters the firebox and where they can ignite the new load quickly, and second, the charcoal will not be smothered by the new load of wood. If you were to simply spread the charcoal out, the new load will smoulder for a long time before igniting.

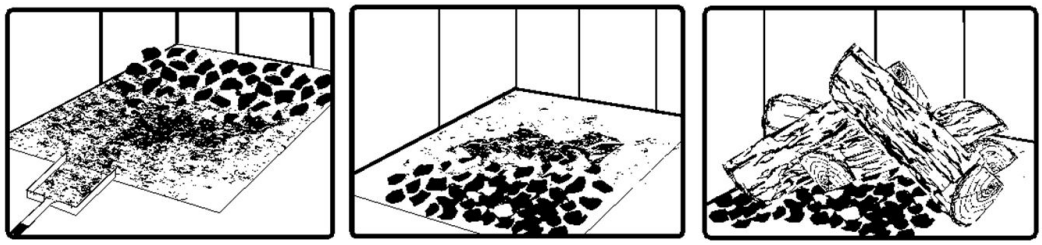

Remove ash first, and then rake charcoal towards the front of the firebox before loading so that it will ignite the new load.

4.6.4 Firing Each New Load Hot

Place the new load of wood on and behind the charcoal, and not too close to the glass. Close the door and open the air control fully. Leave the air control fully open until the firebox is full of flames, the wood has charred to black and its edges are glowing red. Firing each load of wood hot accomplishes a few things:

- Drives the surface moisture from the wood,
- Creates a layer of char on the wood, which slows down its release of smoke,
- Heats the firebox components so they reflect heat back to the fire, and
- Heats the chimney so it can produce strong, steady draft for the rest of the cycle.

Although it is important to fire each new load hot to prepare for a clean burn, *do not allow the fire to burn at full intensity for more than a few minutes.*

DO NOT LEAVE THE INSERT UNATTENDED WHILE A NEW LOAD IS BEING FIRED HOT.

DO NOT OVERFIRE.

When you burn a new load of wood hot to heat up the wood, the insert and the chimney; the result will be a surge of heat from the insert. This heat surge is welcome when the room temperature is a little lower than desirable, but not welcome if the space is already warm. Therefore, allow each load of wood to burn down so that the space begins to cool off a little before loading. Letting the space cool before loading is one of the secrets to clean burning and effective zone heating.

4.6.5 Controling the Air Supply

Once the firewood, firebox and chimney are hot, you can begin to reduce the air supply for a steady burn.

As you reduce the air supply to the fire, two important things happen. First, the firing rate slows down to spread the heat energy in the fuel over a longer period of time. Second, the flow rate of exhaust through the insert and flue pipe slows down, which gives more time for the transfer of heat from the exhaust. You will notice that, as you reduce the air setting, the flames slow down. This is your indication that the insert is burning at its peak efficiency.

If the flames get small and almost disappear when you turn down the air, you have turned down the air too early, or your firewood is wetter than it should be. With good fuel and correct air control use, the flames should slow down, but should stay large and steady, even as the air supply is reduced.

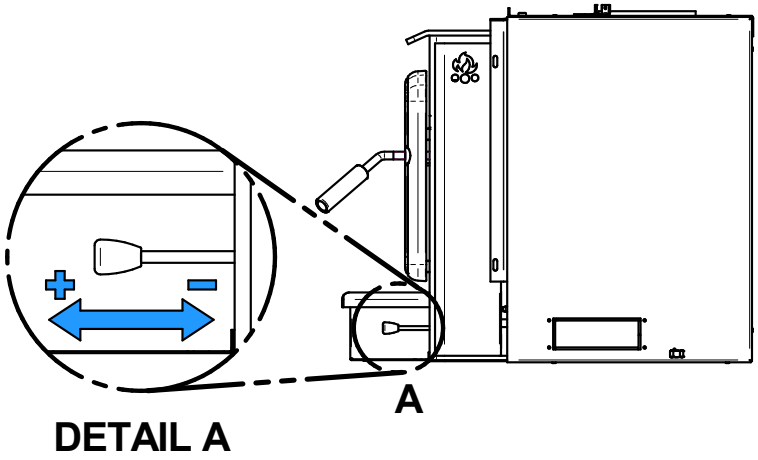

Figure 22: Air Supply Control

4.7 Building Different Fires for Different Needs

Using the air control is not the only way to match the insert's heat output to the heat demand. Your house will need far less heat in October than in January to be kept at a comfortable temperature. If you fill the firebox full in fall weather, you will either overheat the space or turn the insert down so much that the fire will be smoky and inefficient. Here are some suggestions for building fires to match different heat demand.

4.7.1 Small Fires to Take the Chill Off the House

To build a small fire that will produce a low heat output, use small pieces of firewood and load them crisscross in the firebox. The pieces should be only 3" to 4" in diameter. After raking the coals, you can lay two pieces parallel to each other corner to corner in the firebox and lay two more across them in the other direction. Open the air control fully and only reduce the air after the wood is fully flaming. This kind of fire is good for mild weather when you are around to tend the insert and should provide enough heat for four hours or more. Small fires like this are a good time to use softer wood species so there will be less chance of overheating the house.

4.7.2 Long Lasting Low Output Fires

Sometimes you will want to build a fire to last up to eight hours, but don't need intense heat. In this case use soft wood species and place the logs compactly in the firebox so the pieces are packed tightly together. You will need to fire the load hot for long enough to fully char the log surfaces before you can turn the air down. Make sure the fire is flaming brightly before leaving the fire to burn.

4.7.3 High Output Fires for Cold Weather

When the heat demand is high during cold weather, you'll need a fire that burns steadily and brightly. This is the time to use larger pieces of hardwood fuel if you have it. Put the biggest pieces at the back of the firebox and place the rest of the pieces compactly. A densely built fire like this will produce the longest burn your insert is capable of.

You will need to be cautious when building fires like this because if the air is turned down too much, the fire could smoulder. Make sure the wood is flaming brightly before leaving the fire to burn.

4.7.4 Maximum Burn Cycle Times

The burn cycle time is the period between loading wood on a coal bed and the consumption of that wood back to a coal bed of the same size. The flaming phase of the fire lasts for roughly the first half of the burn cycle and the second half is the coal bed phase during which there is little or no flame. The length of burn you can expect from your insert, including both the flaming and coal bed phases, will be affected by a number of things, such as:

- firebox size,
- the amount of wood loaded,
- the species of wood you burn,
- the wood moisture content,
- the size of the space to be heated,
- the climate zone you live in, and
- the time of year.

The table below provides a very general indication of the maximum burn cycle times you are likely to experience, based on firebox volume.

Table 1 : Maximum Burn Time

FIREBOX VOLUME	MAXIMUM BURN TIME
<1.5 cubic feet	3 to 5 hours
1.5 c.f. to 2.0 c.f	5 to 6 hours
2.0 c.f. to 2.5 c.f.	6 to 8 hours
2.5 c.f. to 3.0 c.f.	8 to 9 hours
>3.0 c.f.	9 to 10 hours

Long burn times are not necessarily an indication of efficient insert operation. When you are home during the day and able to tend the fire, it is preferable to build a smaller fire that might provide three or four hours of heating than to fully load the firebox for a much longer burn. Shorter burn cycles make it easier to match the heat output of the insert to the heat demand of the space.

4.7.5 Logs Orientation

In fireboxes that are roughly square, wood can be loaded so that looking through the glass door you see the ends of the logs (north-south) or the sides of the logs (east-west).

East-west loads that are built compactly break down slowly when heated, but the amount of wood you can load is limited because if you put in too many pieces, one may fall against the glass. East-west loads are excellent for long, low output fires for relatively mild weather.

North-south loads break down more quickly, but much more wood can be loaded at a time. This makes north-south loading good for high output, long lasting fires for cold weather.

4.7.6 Carbon Monoxide

When unburned logs remain in the firebox and the flame disappears, go outside and look at the chimney exit. If there is visible smoke, it means that there is still combustible to burn but that the fire lacks air to burn properly. In this situation, the CO rate will increase so it is important to react. Open the door slightly and move the log with a poker. Turn it over and create a passage for the air below, making a trench with the coal bed. Add small pieces of wood to restart the combustion.

5. Maintaining your wood heating system

5.1 Insert Maintenance

Your new insert will give many years of reliable service if you use and maintain it correctly. Some of the internal components of the firebox, such as firebricks, baffles and air tubes, will wear over time under intense heat. You should always replace defective parts with original parts. See «Appendix 11: Exploded Diagram and Parts List», page 58. Firing each load hot to begin a cycle as described above will not cause premature deterioration of the insert. However, letting the insert run with the air control fully open for the entire burn cycles can cause damage over time. The hotter you run the insert throughout burn cycles, the more quickly its components will deteriorate. For that reason, never leave the insert unattended while a new load is being fired hot.

5.1.1 Cleaning Door Glass

Under normal conditions, your door glass should stay relatively clear. If your firewood is dry enough and you follow the operating instructions in this manual, a whitish, dusty deposit will form on the inside of the glass after a week or so of use. This is normal and can be easily removed when the insert is cool by wiping with a damp cloth or paper towel and then drying. Never try to clean the glass when the insert is hot.

In spring and fall when the insert runs at lower temperatures, you may see some light brown stains forming, especially at the lower corners of the glass. This indicates that the fire has been smoky and some of the smoke has condensed on the glass. When the weather is mild, you may find that letting the fire go out is better than trying to maintain a continuous fire. Use the technique described above for building a fire to take the chill off the house.

If you do get brown stains on the glass you can remove them with special cleaners for wood heater glass doors. Do not use abrasives to clean your insert's door glass.

The deposits that form on the glass are the best indication of the quality of your fuel and how well you are doing in operating the insert. Your goal should be clear glass with no brown stains. If you continue to see brown stains on the glass, something about your fuel and operating procedure needs to be changed. Stains on the glass indicate incomplete combustion of the wood, which also means more smoke emissions and faster formation of creosote in the chimney.

If you see brown streaks coming from the edge of the glass, it is time to replace the gasket around the glass. Visit your insert retailer to get the self-adhesive glass gasket and follow the instructions below for installation.

Do not abuse the glass door by striking or slamming shut. Do not use the insert if the glass is broken.

5.1.2 Door Adjustment

In order for your insert to burn at its best efficiency, the door must provide a perfect seal with the firebox. Therefore, the gasket should be inspected periodically to check for a good seal. The gasket seal may be improved with a simple latch mechanism adjustment. To adjust:

1. Remove the split pin by pulling and turning it using pliers.
2. Turn the handle counter clock wise one turn to increase pressure.
3. Re-install the split pin with a small hammer.

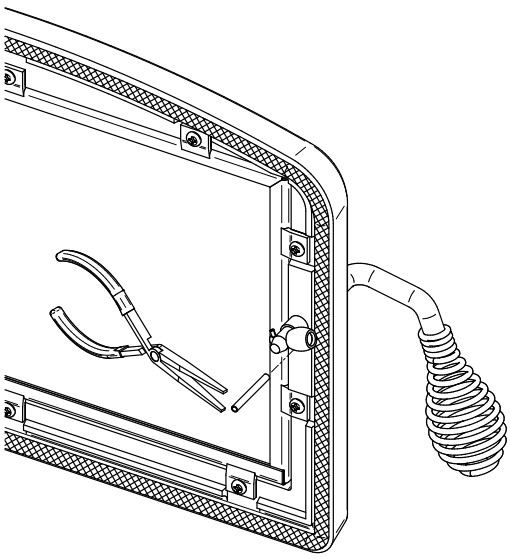

Figure 23: Removing the split pin

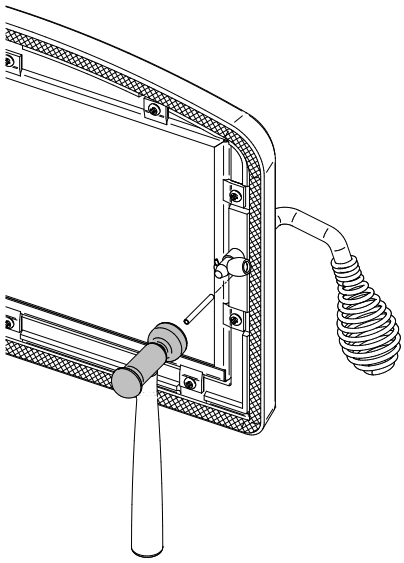

Figure 24: Installing the split pin

5.1.3 Replacing the Door Gasket

It is important to maintain the gasket in good condition. After a year or more of use, the door gasket will compress and become hard, which may allow air to leak past it. You can test the condition of the door gasket by closing and latching the door on a strip of paper. Test all around the door. If the paper slips out easily anywhere, it is time to replace the gasket.

Use the correct replacement gasket that you can purchase from your retailer. The diameter and density of the gasket is important to getting a good seal.

Place the door face-down on something soft like a cushion of rags or piece of carpet. Remove the old gasket from the door by pulling and prying it out with an old screw driver. Then use the screwdriver to scrape the old gasket adhesive from the door. Now run a 1/4" (6 mm) bead of high temperature silicone in the door gasket groove. Starting from the middle of the hinge side, press the gasket into the groove. Do not stretch the gasket as you place it. Leave the gasket about 1/2" long when you cut it and press the end into the groove. Tuck any loose fibres under the gasket and into the silicone. Close the door and do not use the insert for 24 hours.

5.1.4 Replacing the Glass or the Glass Gasket

It is a good idea to replace the glass gasket when the door gasket is replaced. The gasket is flat, adhesive-backed, woven fibreglass. Remove the glass retaining screws and clips. Lift out the glass and pull off the old gasket. This is a good time to clean the glass thoroughly.

The gasket must be centred on the edge of the glass. To do this easily, peel back a section of the paper covering the adhesive and place the gasket on a table with the adhesive side up. Stick the end of the gasket to the middle of one edge, then press the edge of the glass down onto the gasket, taking care that it is perfectly centred on the gasket. Peel off more of the backing and rotate the glass and press the next section onto the gasket. Do not stretch the gasket as you place it. Continue until you get to the start and trim the gasket to length. Now pinch the gasket to the glass in a U shape, all around the glass. Reinstall the glass, being careful to centre the glass carefully in the door.

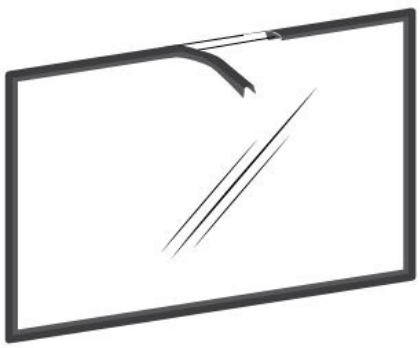

Do not over-tighten the screws. Note that the two main causes of broken door glass are uneven placement in the door and over-tightening of retaining screws.

Do not abuse the glass door by striking or slamming shut. Do not use the stove if the glass is broken.

To replace the glass **(D)**, remove the eight screws **(A)**, the eight glass retainers **(B)**, and the metal frames **(C)**. Remove the damaged glass and install the new one in place. Make sure you have a gasket around the replacement glass (see procedure above). Put back the metal frames and the glass retainers and secure to the door frame **(E)** with the screws removed earlier.

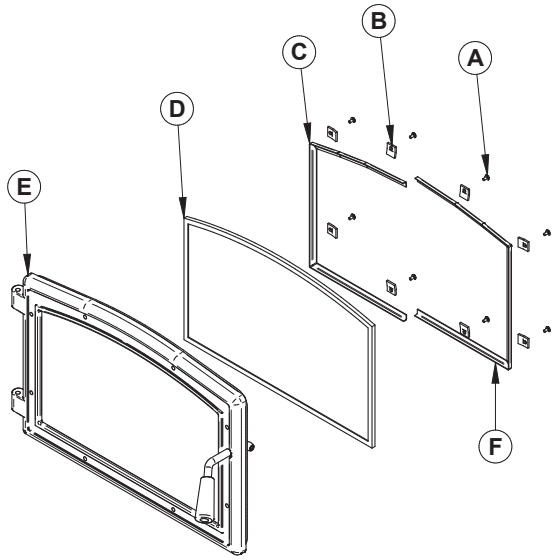

Figure 25: Replacing the glass

5.1.5 Cleaning and Painting the Insert

Do not attempt to clean or paint the insert when the unit is hot. Painted surfaces can be wiped down with a damp cloth. Plated surfaces may be scratched by abrasive cleaners. To maintain the finish at its original brilliance, use only a damp soft cloth to clean plated surfaces.

If the paint becomes scratched or damaged, you can give your wood insert a brand new look by repainting it with heat-resistant paint. Before painting, roughen the surface with fine sand paper, wipe it down to remove dust, and apply two thin coats of paint. For best results, use the same paint that was originally used on the insert, which is available in spray cans. See your dealer for details.

5.2 Chimney and Chimney Liner Maintenance

5.2.1 Why Chimney Cleaning Is Necessary

Wood smoke can condense inside the chimney liner and chimney, forming a combustible deposit called creosote. If creosote is allowed to build up in the venting system it can ignite when a hot fire is burned in the insert and a very hot fire can progress to the top of the chimney. Severe chimney fires can damage even the best chimneys. Smouldering, smoky fires can quickly cause a thick layer of creosote to form. When you avoid smouldering so the exhaust from the chimney is mostly clear, creosote builds up more slowly. Your new insert has the right characteristics to help you to burn clean fires with little or no smoke, resulting in less creosote in the chimney.

5.2.2 How Often Should You Clean the Chimney?

It is not possible to predict how much or how quickly creosote will form in your chimney. It is important, therefore, to check the build-up in your chimney monthly when getting used to the new insert until you determine the rate of creosote formation. Even if creosote forms slowly in your system, the chimney should be cleaned and inspected at least once each year.

Contact your local municipal or provincial fire authority for information on how to handle a chimney fire. Have a clearly understood plan to handle a chimney fire.

5.2.3 Cleaning The Chimney

Chimney cleaning can be a difficult and dangerous job. If you don't have experience cleaning chimneys, you might want to hire a professional chimney sweep to clean and inspect the system for the first time. After having seen the cleaning process, you can decide if it is a job you would like to take on.



The most common equipment used are fibreglass rods with threaded fittings and stiff plastic brushes. The brush is forced up and down inside the chimney flue to scrub off the creosote.

The chimney should be checked regularly for creosote build-up. Inspection and cleaning of the chimney can be facilitated by removing the baffle.

Before installing the firebrick, check to ensure that none are broken or damaged in any way, and replace the damaged ones. Check the firebrick for damage at least annually and replace any broken or damaged ones with new ones. Inspection and cleaning of the chimney is facilitated by the removable baffle.

OPERATION OF YOUR INSERT WITHOUT THE BAFFLE MAY CAUSE UNSAFE AND HAZARDOUS TEMPERATURE CONDITIONS AND WILL VOID THE WARRANTY.

PART B - INSTALLATION

6. Pre-Installation Masonry Fireplace Requirements

The masonry fireplace must meet the minimum requirements found in the building code enforced locally, or the equivalent for a safe installation. Contact your local Building Inspector for requirements in your area. An inspection of the fireplace should include the following:

1. *Condition of the Fireplace and Chimney*

   The masonry fireplace and chimney should be inspected prior to installation, to determine that they are free from cracks, loose mortar, creosote deposits, blockage, or other signs of deterioration. If evidence of deterioration is noted, the fireplace or chimney should be upgraded and cleaned prior to installation.

   Masonry or steel, including the damper plate, may be removed from the smoke shelf and adjacent damper frame if necessary to accommodate the insert's chimney liner, provided that their removal will not weaken the structure of the fireplace and chimney, and will not reduce protection for combustible materials to less than that required by the building code.

2. *Chimney Caps*

   Mesh type chimney caps must have provision for regular cleaning, or the mesh should be removed to eliminate the potential of plugging.

3. Adjacent Combustibles

   The fireplace should be inspected to make sure that there is adequate clearance to combustibles, both exposed combustibles to the top, side, and front as well as concealed combustibles, in the chimney and mantle area. Your local inspector should have information on whether older fireplaces are of adequate construction.

4. *Opening Size*

   Refer to section «8.5 Minimum Masonry Opening and Clearances to Combustibles», page 36 for suitable size fireplace openings.

7. Safety Information

- The information given on the certification label affixed to the appliance always overrides the information published, in any other media (owner's manual, catalogues, flyers, magazines and web sites).
- Mixing of appliance components from different sources or modifying components may result in hazardous condtions. Where any such changes are planned, Stove Builder International Inc. Should be contacted in advance.
- Any modification of the appliance that has not been approved in writing by the testing authority violates CSA B365 (Canada), and ANSI NFPA 211 (USA).
- Connect this insert only to a listed stainless steel chimney liner for use with solid fuel.
- If required, a supply of combustion air shall be provided to the room.
- **CAUTION: DO NOT CONNECT TO OR USE IN CONJUNCTION WITH ANY AIR DISTRIBUTION DUCTWORK UNLESS SPECIFICALLY APPROVED FOR SUCH INSTALLATION.**
- **CAUTION: DO NOT CONNECT THIS UNIT TO A CHIMNEY FLUE SERVING ANOTHER**

APPLIANCE.

- The insert and its stainless steel chimney liner are to be installed only within a lined masonry chimney and masonry fireplace conforming to building codes for use with solid fuel. Do not remove bricks or mortar from the existing fireplace when installing the insert.
- To be installed as a freestanding room heater with the clearances in the manufacturer's installation instructions. It is strictly forbidden to install this room heater in any factory-built fireplace.

7.1 Regulations Covering Insert Installation

When installed and operated as described in these instructions, this wood insert is suitable for use in residential installations but is not intended for installation in a bedroom.

In Canada, the CSA B365 Installation Code for Solid Fuel Burning Appliances and Equipment and the CSA C22.1 Canadian National Electrical Code are to be followed in the absence of local code requirements. In the USA, the ANSI NFPA 211 Standard for Chimneys, Fireplaces, Vents and Solid Fuel-Burning Appliances and the ANSI NFPA 70 National Electrical Code are to be followed in the absence of local code requirements.

This insert must be installed with a continuous chimney liner of 6" diameter extending from the insert to the top of the chimney. The chimney liner must conform to the Class 3 requirements of CAN/ULC-S635, Standard for Lining Systems for Existing Masonry or Factory-built Chimneys and Vents, or CAN/ULC-S640, Standard for Lining Systems for New Masonry Chimneys.

The Insert is not approved for use with a so-called "positive flue connection" to the clay tile of a masonry chimney.

8. Clearances to Combustible Material

The clearances shown in this section have been determined by test according to procedures set out in safety standards ULC S628 (Canada), UL1482 (U.S.A.) and UL737 (U.S.A.). When the insert is installed so that its surfaces are at or beyond the minimum clearances specified, combustible surfaces will not overheat under normal and even abnormal operating conditions.

NO PART OF THE INSERT MAY BE LOCATED CLOSER TO COMBUSTIBLES THAN THE MINIMUM CLEARANCE FIGURES GIVEN.

8.1 Location of the Certification Label

Since the information given on the certification label attached to the appliance always overrides the information published in any other media (owner's manual, catalogues, flyers, magazines and web sites), it is important to refer to it in order to have a safe and compliant installation. In addition, you will find information about your insert (model, serial number, etc.). You can find the certification label on the side, towards the front of the outside of the air jacket of the insert.

To access the certification label, the faceplate may need to be removed. Therefore, we recommend that you note the insert's serial number on page 4 of this manual, since it will be needed to precisely identify the version of the appliance in the event you require replacement parts or technical assistance. It is also recommended to register your warranty online.

8.2 Masonry Fireplace Throat Damper

If the fireplace's draft control system is to remain in the masonry fireplace, it must be locked open for access of the chimney liner or removed entirely. If you remove draft control system from the masonry hearth, you will need to install the metal plate (27009), supplied with the owner's manual kit, indicating that the masonry hearth has been modified. It must be secured inside the masonry hearth, in a visible place and easy to locate.

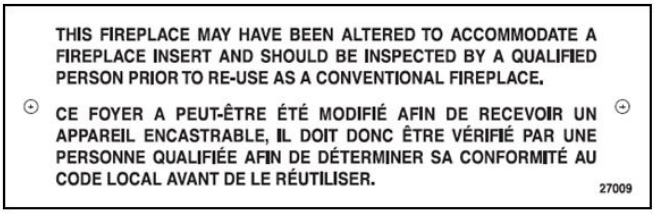

Figure 26: Notice Plate 27009

8.3 Installation of a Combustible Mantel Shelf

It is possible to install a combustible shelf with a maximum depth of 12" at a height of at least 27" above the insert. At a height of more than 27", the shelf must still have a maximum depth of 12". Refer to «Figure 27: Shelf Clearances».

Note that you can reduce the mantel shelf clearance (distance between the insert and the shelf) with the use of a heat shield, sold separately. See «Appendix 7: Optional Heat Shield Installation» for details.

Table 2 : Mantel Shelf Clearances

MAXIMUM MANTEL SHELF DIMENSION (X)	MANTEL SHELF CLEARANCES (I)
12" (305mm) max.	27" (686 mm) min.

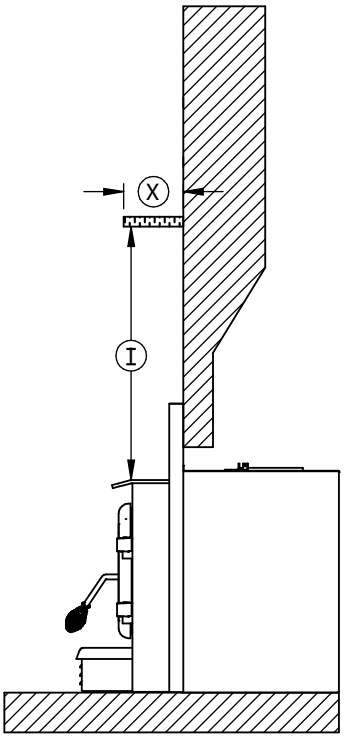

Figure 27: Shelf Clearances

8.4 Floor Protection

It is necessary to have a floor protection made of non-combustible materials that meets the measurements specified in the «Table 3 : Floor Protection» below.

Table 3 : Floor Protection

	FLOOR PROTECTION	
	Canada	**USA**
B	18" (457 mm)	16" (406 mm)
M	8" (203 mm)	N/A
N	N/A	8" (203 mm)

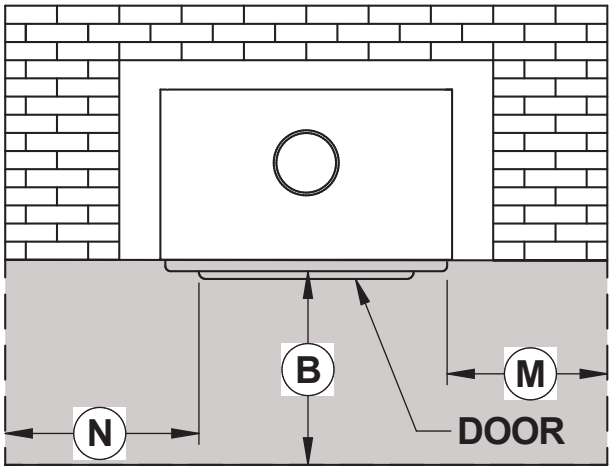

Figure 28: Floor Protection

Refer to «Figure 29: Additional Floor Protection» to determine the need to add floor protection **(D)** beyond the hearth extension.To do so, you must do the following calculation using the data in «Table 4 : Data for Floor Protection Calculation» of this section: D = B - (A - C).

Table 4 : Data for Floor Protection Calculation

	A	B	C	D	E	Air Jacket
Maximum Extended	Dimensions of the hearth extension	See section 8.4.1 and 8.4.2	5 ¼" (128 mm)	D=B-(A-C)	8 ¾" (228 mm)	Flush with fireplace facing
Minimum Extended	Dimensions of the hearth extension	See section 8.4.1 and 8.4.2	3 1/8" (77 mm)	D=B-(A-C)	10 7/8" (279 mm)	Back from fireplace facing 2"

If the value **(D)** is negative or zero, you do not have to add more floor protection in front of the unit, because the masonry fireplace hearth extension is large enough. If the value **(D)** is positive, you will need floor protection in front of the hearth extension at least equivalent to the result **(D)**.

ENGLISH

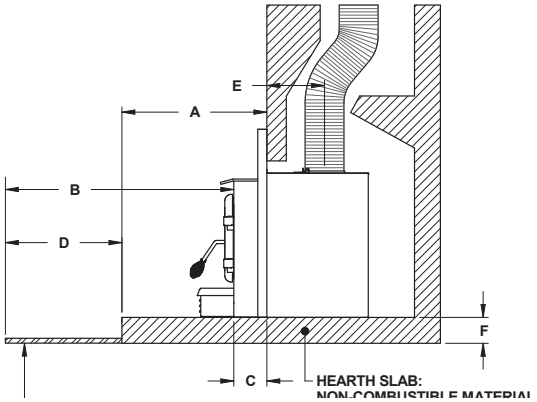

Figure 29: Additional Floor Protection

8.4.1 Installation Raised of 5" and Less

If non-combustible material floor protection needs to be added in front of and level with the hearth extension of the masonry fireplace (F = 5" or less), an R value equal to or greater than 1.00 is required and should extend at least 23" (584 mm) in front of the unit **(B)**.

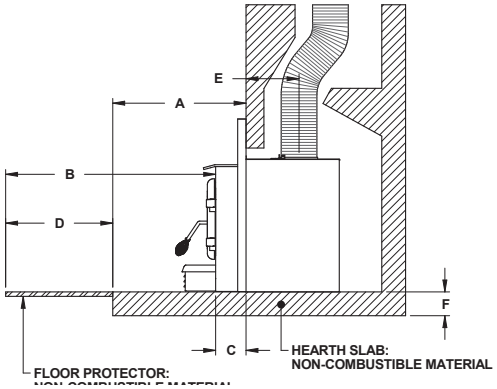

Figure 30: 5" or less raised base installation

8.4.2 Installation Raised of More Than 5"

If the extension of the masonry hearth is raised at least 5" (127mm) from the floor protection, a non-combustible material without an R value must extend at least 16" (406 mm USA) or 18" (457 mm Canada) in front of the unit.

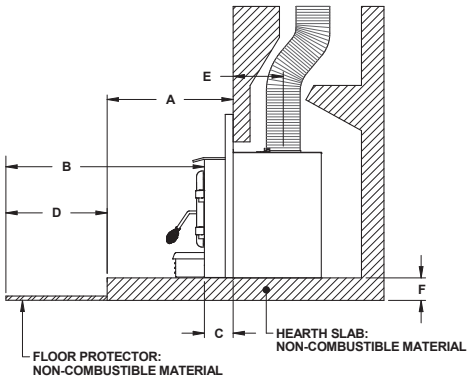

Figure 31: More than 5" raised base installation

** For a 1/8" thickness. You cannot «stack» horizontal still air to accumulate R-values; you must separate each layer of horizontal still air with another non-combustible material.

8.4.3 R Value

There are two ways to calculate the R value of the floor protection. First, by adding the R-values of materials used, or by the conversion if the K factor and thickness of the floor protection are given.

To calculate the total R value from R values of the materials used, simply add the R-values of materials. If the result is equal to or greater than the R-value requirements, the combination is acceptable. To know the R-values of some selected materials, see table below.

Table 5 : Thermal Characteristics of Common Floor Protection Materials*

MATERIAL	CONDUCTIVITY (K) PER INCH	RESISTANCE (R) PER INCH THICKNESS
Micore® 160	0.39	2.54
Micore® 300	0.49	2.06
Durock®	1.92	0.52
Hardibacker®	1.95	0.51
Hardibacker® 500	2.3	0.44
Wonderboard®	3.23	0.31
Cement mortar	5.00	0.2
Common brick	5.00	0.2
Face brick	9.00	0.11
Marble	14.3 – 20.00	0.07 – 0.05
Ceramic tile	12.5	0.008
Concrete	1.050	0.950
Mineral wool insulation	0.320	3.120
Limestone	6.5	0.153
Ceramic board (Fibremax)	0.450	2.2
Horizontal still air** (1/8")	0.135	0,920**

*Information as reported by manufacturers and other resources

Example:

Required floor protection R of 1.00. Proposed materials: four inches of brick and one inch of Durock® board.

Four inches of brick (R = 4 x 0,2 = 0,8) plus 1 inch of Durock® (R = 1 x 0.52 = 0.52).

0.8 + 0.52 = 1.32.

This R value is larger than the required 1.00 and is therefore acceptable.

In the case of a known K and thickness of alternative materials to be used in combination, convert all K values to R by dividing the thickness of each material by its K value. Add the R values of your proposed materials as shown in the previous example.

Example:

K value = 0.75

Thickness = 1

R value = Thickness/K = 1/0.75 = 1.33

8.5 Minimum Masonry Opening and Clearances to Combustibles

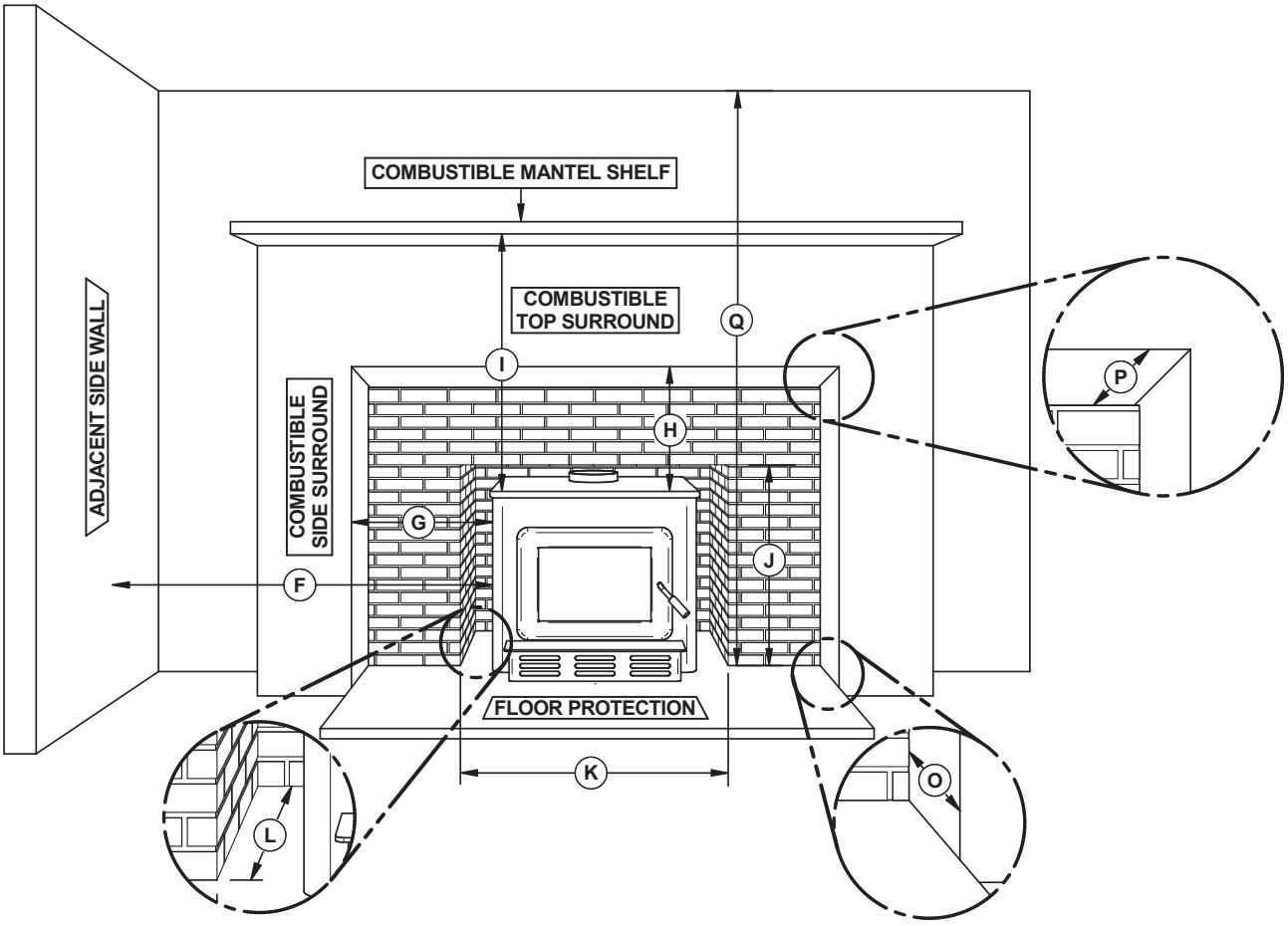

Figure 32: Masonry Opening and Clearances

	CLEARANCES
F	16" (406 mm)
G	9" (229 mm)
H	27" (686 mm)
I	27" (686 mm)*
Q	84" (213 cm)

	MINIMUM MASONRY OPENING
J	23 3/8 " (594 mm)
K	28 7/8 " (733 mm)**
L	15 3/4 " (400 mm)

	MAXIMUM THICKNESS
O	5" (127 mm)
P	12" (305 mm)

* Note that you can reduce the mantel shelf clearance (distance between the insert and the shelf)with the use of a heat shield, sold separately. See «Appendix 7: Optional Heat Shield Installation» for details.

** Where a fresh air intake is needed, we suggest you add a minimum of 4" to the width of the minimum masonry opening.

9. The Venting System

9.1 General

The venting system, made up of the chimney and the liner inside the chimney, acts as the engine that drives your wood heating system. Even the best insert will not function safely and efficiently as intended if it is not connected to a suitable chimney and liner system.

The heat in the flue gases that pass from the insert into the chimney is not waste heat. This heat is what the chimney uses to make the draft that draws in combustion air, keeps smoke inside the insert and safely vents exhaust to outside. You can think of heat in the flue gas as the fuel the chimney uses to make draft.

9.2 Block-off Plate

To reduce the possibility of a cold air draft from the masonry chimney to get into the room when the insert in not working, the installation of a sheet metal block-off plate (**(A)** in the drawing below) is recommended. Once you have made the block-off plate to the proper dimension, cut the pipe hole slightly larger than the liner's diameter and then install the liner through this hole. Set the block-off plate in place and secure with masonry nails into mortar joints. Finally, seal the joints between the plate and the wall with high temperature silicone, and then use stove-furnace cement to seal between the pipe and the hole.

In Canada, CSA B365 Standard permits the use of ''Roxul'' type wool stuffed around the liner as it passes through the throat area as an alternative to a sheet metal block-off plate. However, this method is inferior to the use of a sheet metal block-off plate.

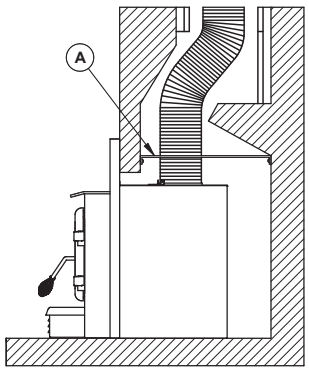

Figure 33: Block-off Plate



Figure 34: Block-off Plate

9.3 Suitable Chimneys

Your wood insert will provide optimum efficiency and performance when connected to a 6-inch diameter chimney liner. The connection to a chimney having a diameter of at least 5 inches (Canada only) is permitted, if it allows the proper venting of combustion gases and that such application is verified and authorized by a qualified installer. Otherwise, the diameter of the flue should be 6 inches. The reduction of liner diameter to less than 6" should only be done if the total height of the masonry chimney is greater than 20 feet.

9.4 Liner Installation

We recommend the use of a chimney liner (rigid or flexible) to ensure satisfactory performance. To ensure an optimal draft, we also strongly recommend adding a minimum of 12" rigid liner between the top of the masonry chimney and the rain cap. In all cases, liners should be installed in accordance with the liner manufacturer's instructions, including instructions for extension above the masonry.

Use Chimney Liners Listed UL 1777, ULC S635 or CAN/ULC S640.

In order to connect the insert to the liner, refer to Section «9.5 Chimney Liner Installation».

ATTENTION INSTALLER: When positioning the unit in a fireplace opening prior to the flue installation, install the insert into the opening until the top lip of air jacket is flush with fireplace facing.

If lag-bolts or anchors are to be used to secure the insert, the hole locations should be marked with the unit in place. Remove the insert and locate the anchors.

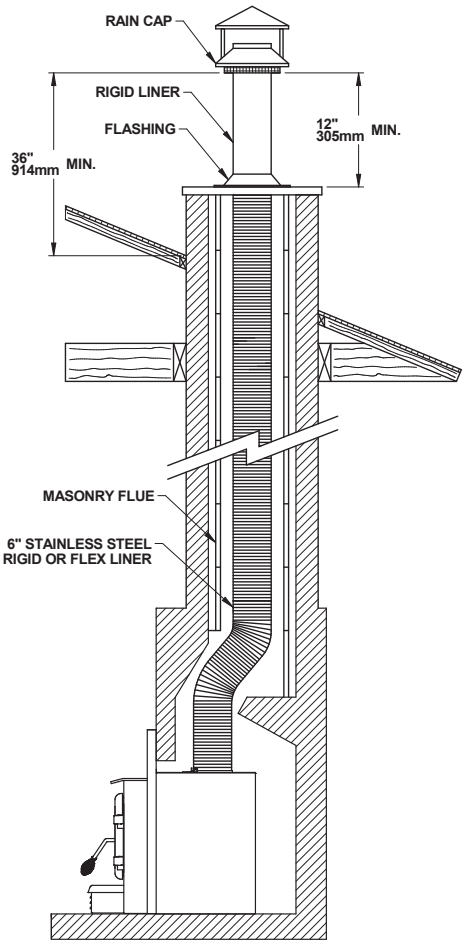

Figure 35: Liner Installation

9.5 Chimney Liner Installation

The preferred method for installing the chimney liner is found in Section «9.5.1 When the Chimney Liner Align With the Insert's Flue Outlet». Use a liner offset adapter (Section «9.5.2 When the Chimney Liner Does Not Align With the Insert's Flue Outlet») only as a last resort.

9.5.1 When the Chimney Liner Align With the Insert's Flue Outlet

You have two options:

A) Install the chimney liner starter adapter, provided with the chimney liner. Follow the chimney liner starter adapter manufacturer's instructions.

In order to connect the chimney liner starter adapter to the flue outlet, you can install the brackets with the screws that are in the owner's manual kit.

Using a powered driver, secure the three brackets with the three screws provided on top of the insert in the three holes in front of the flue outlet. The long end of the brackets must be attached to the insert. Insert the chimney liner into the flue collar of the unit and secure the liner to the brackets with three self-tapping screws (not included).

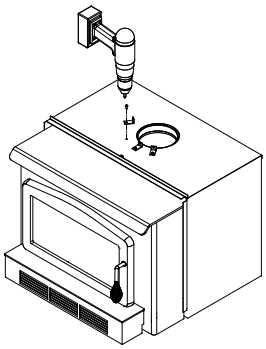

Figure 36: Securing the brackets

B) Your dealer may offer a liner fastening system, sold separately. Follow the installation instructions provided with the liner fastening system.

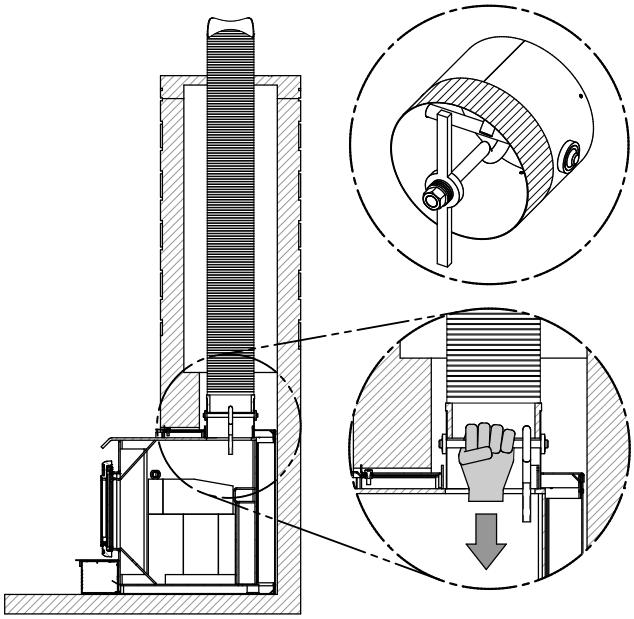

Figure 37: Liner fastening system

9.5.2 When the Chimney Liner Does Not Align With the Insert's Flue Outlet

You can install a liner offset adapter, sold separately. Please note that an offset adaptor reduces the free flow of exhaust gases and may result in smoke roll-out from the insert when it's door is opened for loading. Only use an offset adaptor if a) there is no other alternative and b) if the total height of the fireplace and chimney is at least 20 feet. If you must install a liner offset adapter, secure the three brackets with the three screws provided on top of the insert in the three holes in front of the flue outlet. The long end of the brackets must be attached to the insert. The brackets and screws are in the insert's owner's manual kit. Then follow the instructions in the manual provided with the liner offset adapter kit.

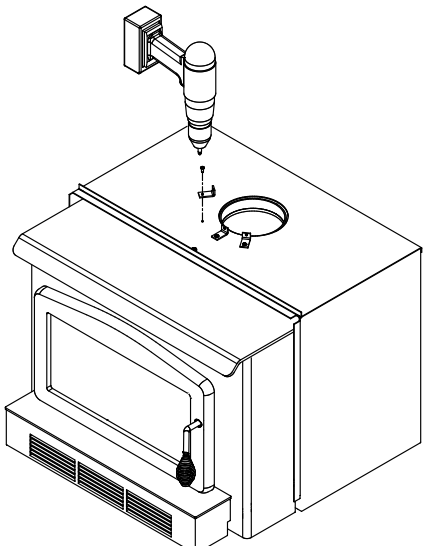

Figure 38: Securing the brackets

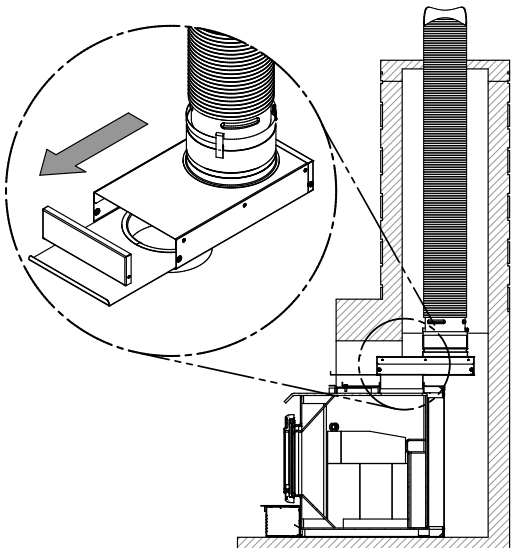

Figure 39: Offset liner adaptor

9.6 Minimum Chimney Height

The top of the chimney should be tall enough to be above the air turbulence caused when wind blows against the house and its roof. The chimney must extend at least 1 m (3 ft.) above the highest point of contact with the roof, and at least 60 cm (2 ft.) higher than any roof line or obstacle within a horizontal distance of 3 m (10 ft.).

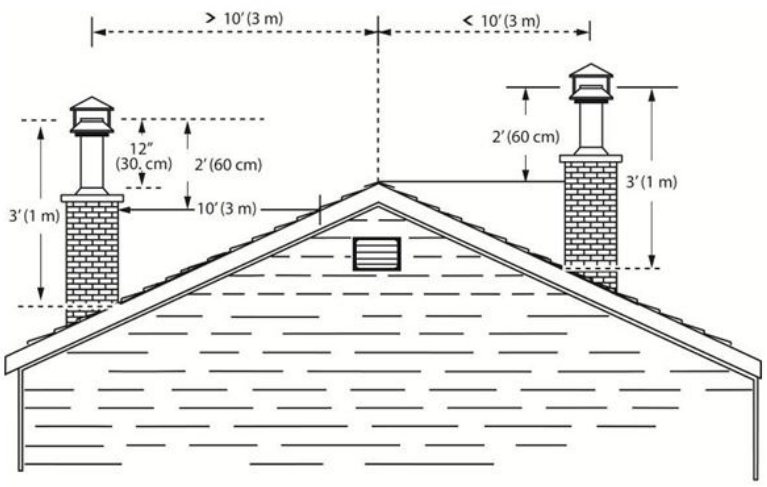

Figure 40: Minimum Chimney Height

9.7 The Relationship Between the Chimney and the House

Because the venting system is the engine that drives the wood heating system, it must have the right characteristics. The signs of bad system design are cold backdrafting when there is no fire in the insert, slow kindling of new fires, and smoke roll-out when the door is opened for loading.

9.7.1 Why the Chimney Should Penetrate the Highest Heated Space

When it is cold outside, the warm air in the house is buoyant so it tends to rise. This tendency of warm air to rise creates a slight pressure difference in the house. Called 'stack effect', it produces a slightly negative pressure low in the house (relative to outside) and a slightly positive pressure zone high in the house. If there is no fire burning in a heater connected to a chimney that is shorter than the warm space inside the house, the slight negative pressure low in the house will compete against the desired upward flow in the chimney.

There are two reasons why the chimney in the house at right will cold backdraft when it is cold outside and there is no fire burning in the insert. First, the chimney runs up the outside of the house, so the air in it is colder and denser than the warm air in the house. And second, the chimney is shorter than the heated space of the house, meaning the negative pressure low in the house will pull outside air down the chimney, through the insert and into the room. Even the finest insert will not work well when connected to this chimney.



Figure 41: Chimney location in the house

9.8 Supply of Combustion Air

In Canada, wood inserts are not required to have a supply of combustion air from outdoors because research has shown that these supplies do not give protection against house depressurization and may fail to supply combustion air during windy weather. However, to protect against the risk of smoke spillage due to house depressurization, a carbon monoxide (CO) detector/alarm is required in the room in which the insert is installed. The CO detector will provide warning if for any reason the wood insert fails to function correctly.

9.8.1 Air Supply in Conventional Houses

The safest and most reliable supply of combustion air for your wood insert is from the room in which it is installed. Room air is already preheated so it will not chill the fire, and its availability is not affected by wind pressures on the house. Contrary to commonly expressed concerns, almost all tightly-sealed new houses have enough natural leakage to provide the small amount of air needed by the insert. The only case in which the wood insert may not have adequate access to combustion air is if the operation of a powerful exhaust device (such as a kitchen range exhaust) causes the pressure in the house to become negative relative to outdoors.

If you do install an air supply through the wall of the house, be aware that its pressure can be affected during windy weather. If you notice changes in wood insert performance in windy weather, and in particular if smoke puffs from the insert, you should disconnect the outdoor air duct from the insert and remove the duct. In some windy conditions, negative pressure at the duct weatherhood outside the house wall may draw hot exhaust gases from the insert backwards through the duct to outdoors. Check the outdoor air duct for soot deposits when the full system is cleaned and inspected at least once each year.

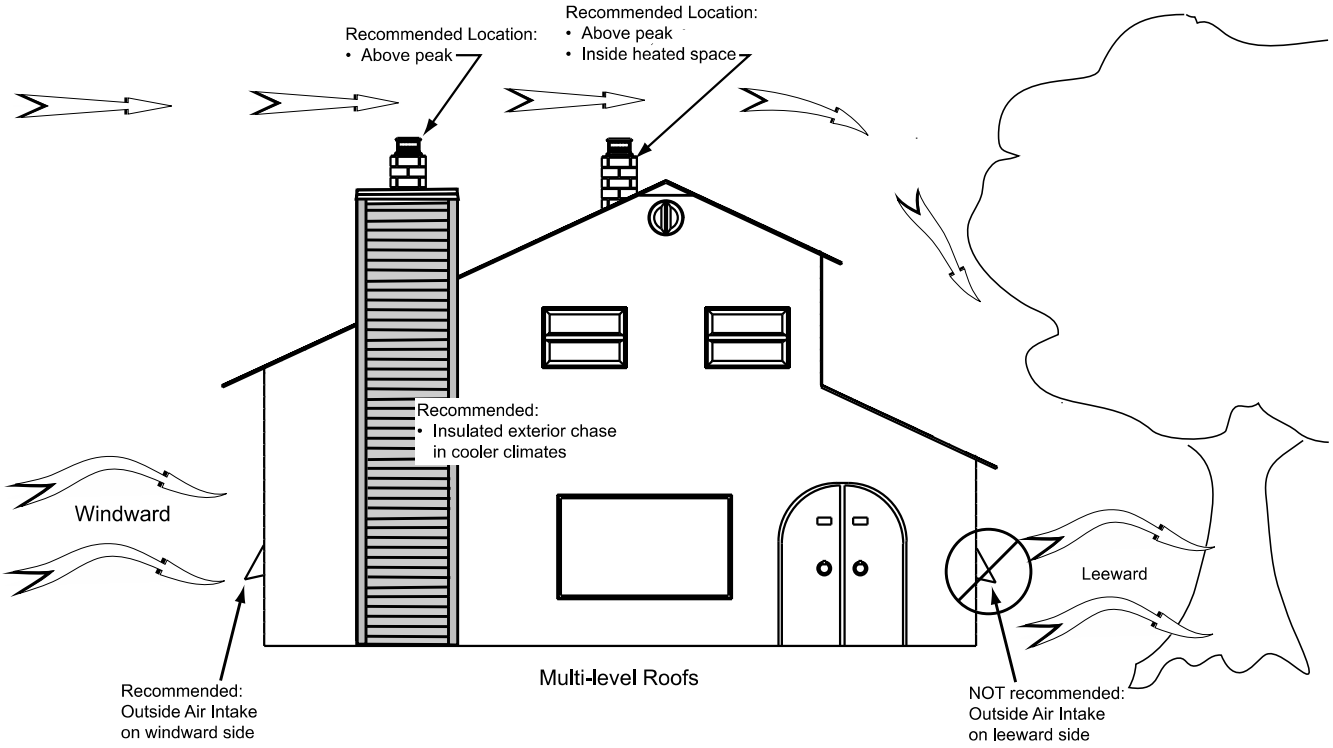

Figure 42: Air supply in conventional houses

APPENDIX 1: ASH LIP AND BLOWER INSTALLATION

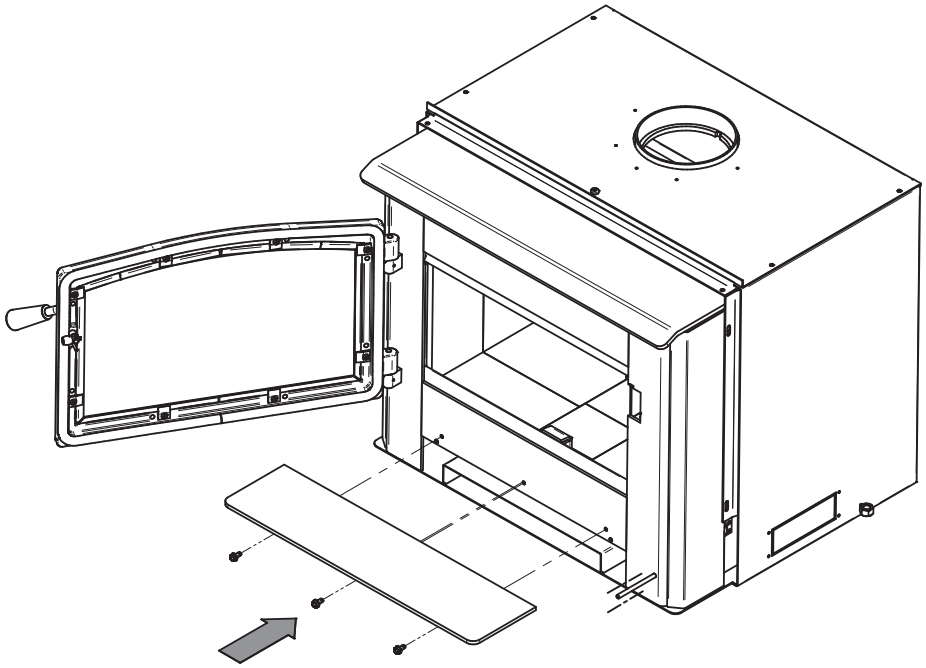

1. Before installing the blower, open the door and install the ash lip by screwing it in place with 3 screws, located in the user manual kit.

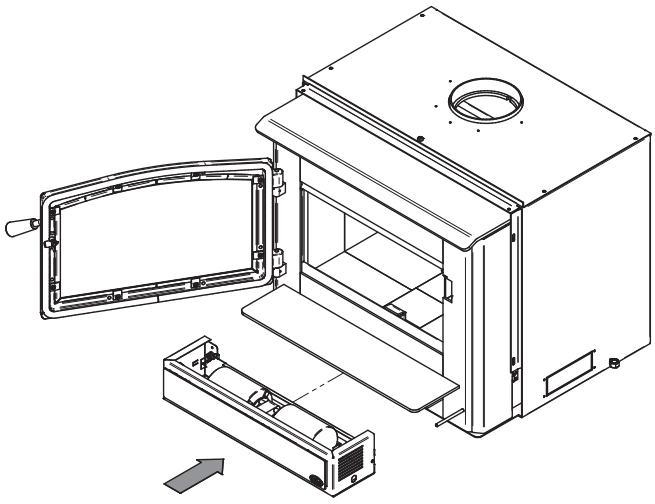

2. Slide the blower underneath the ash lip.

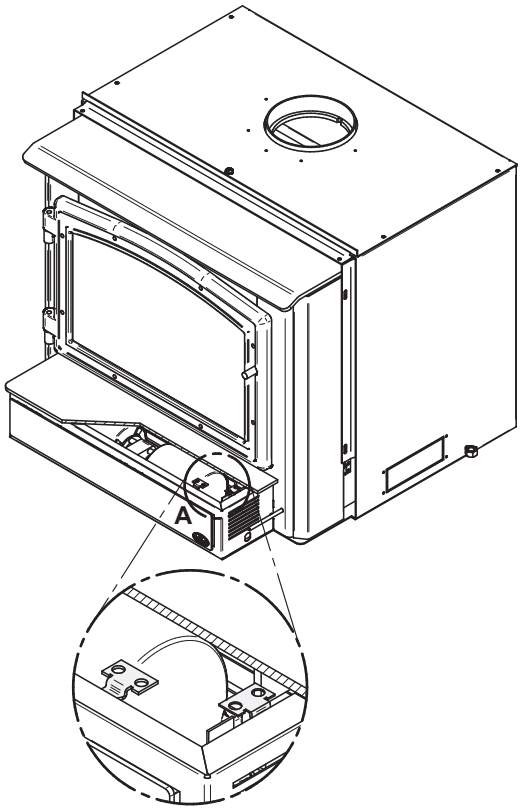

DETAIL A

3. Push the blower into the clips located underneath the ash lip.

APPENDIX 2: DOOR OVERLAY INSTALLATION

In order to complete the assembly of this wood insert, you need to install the door overlay **(A)**. See figures below for installation instructions.

Note: It is not necessary to remove the glass to install the overlay.

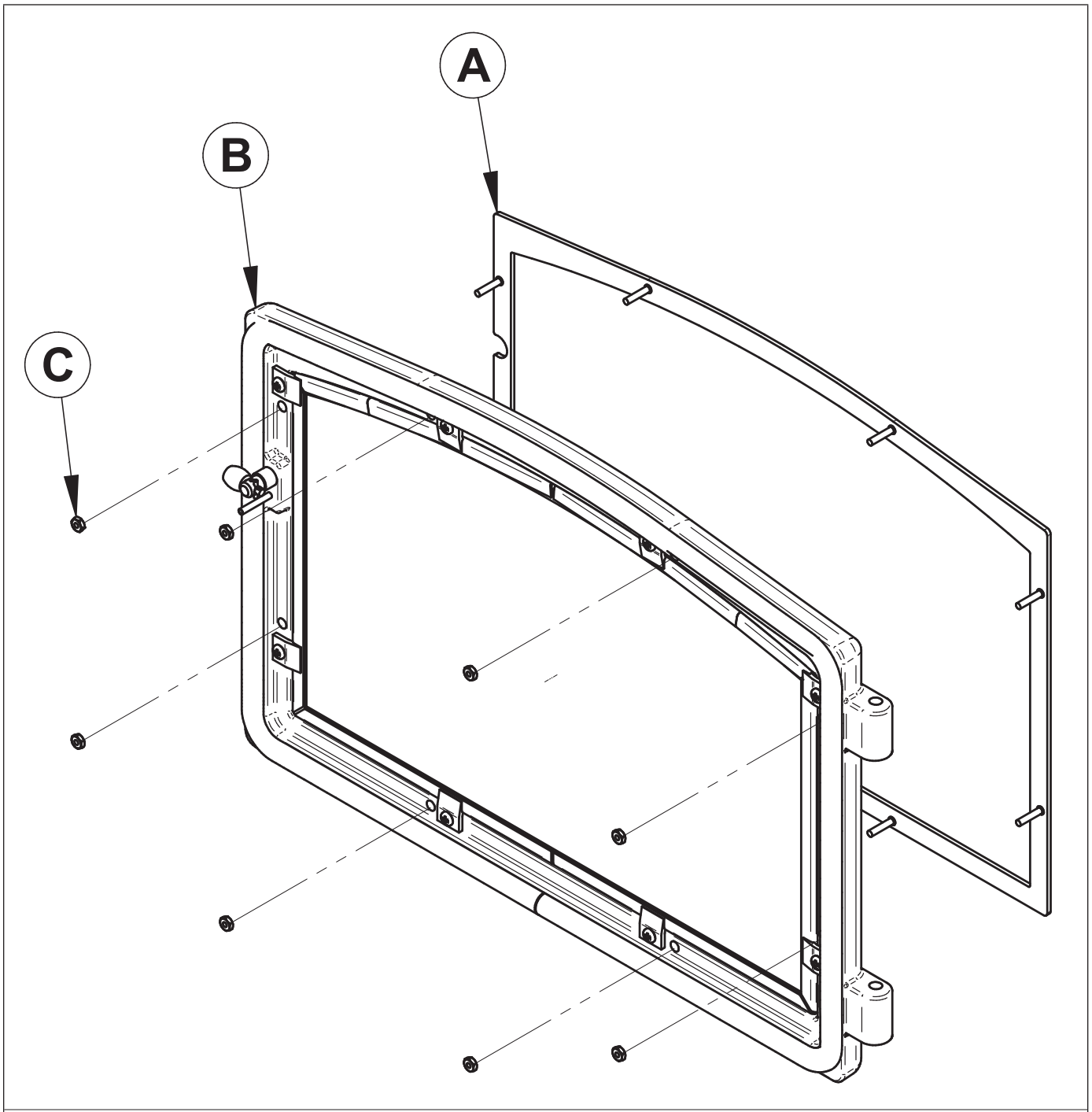

Position the overlay **(A)** on the door frame **(B)** and secure it in place from behind using the nuts **(C)**.

APPENDIX 3: OPTIONAL FRESH AIR INTAKE KIT INSTALLATION

Note : The fresh air intake kit may be installed on the right or left end side of the unit.

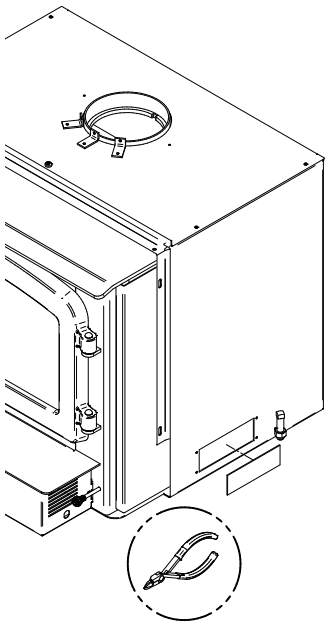

1. Using pliers, open the rectangular outlet on the side of the unit by gently removing the material held in place by micro joints.

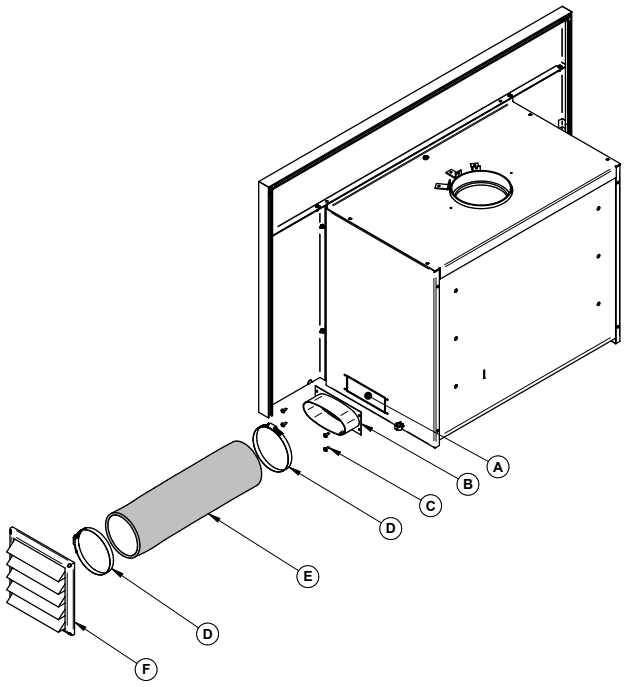

2. Install the fresh air intake adapter **(B)** with four screws **(C)** then secure the flexible pipe[1] **(E)** (not included) to the adapter **(B)** using one of the pipe clamps **(D)**. Secure the other end of the pipe to the outside wall termination **(F)** using the other pipe clamp **(D)**. The outside wall termination **(F)** must be installed outside of your home.

[1] The pipe must be HVAC type, insulated, and must comply with ULC S110 and/or UL 181, Class 0 or Class 1.

APPENDIX 4: OPTIONAL FACEPLATE AND TRIMS INSTALLATION

The illustrations may vary from one model to another, but the method of assembly remains the same.

Hardware bag content:

- Bolts #10-24 x 1/2" (8x)
- Corner bracket and screws (2x)
- Trim retainers (8x)
- Nuts #10-24 (8X)

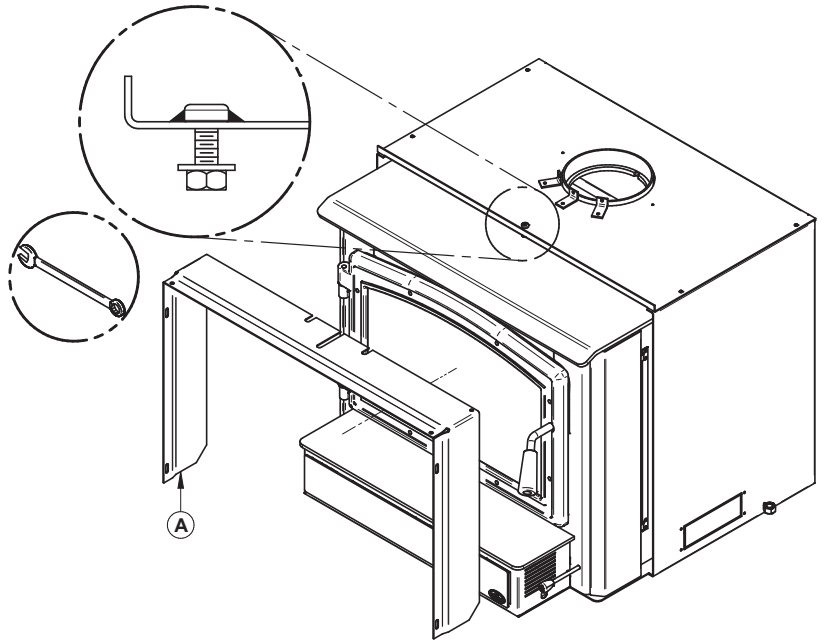

1. Remove the faceplate extension **(A)** secured between the firebox and the convection air jacket.

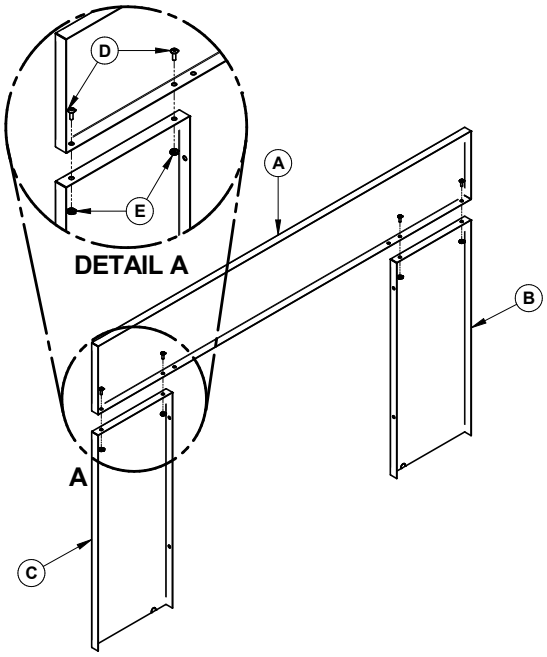

2. Place the faceplate panels with the finished side down on a flat, soft, non-abrasive surface. Line up the holes of the upper faceplate panel **(A)** with the holes of the side panels **(B)** and **(C)**. Secure them together using four bolts **(D)** and nuts **(E)** provided.

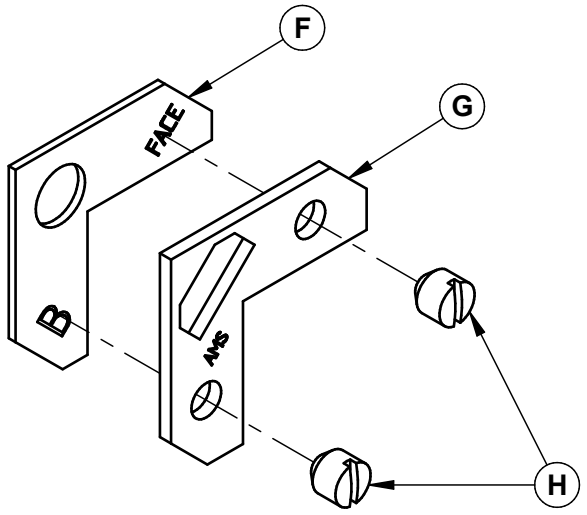

3. Partially thread the screws **(H)** on the trim's corner bracket **(G)** then superimpose the corner brackets **(F)** and **(G)** as shown.

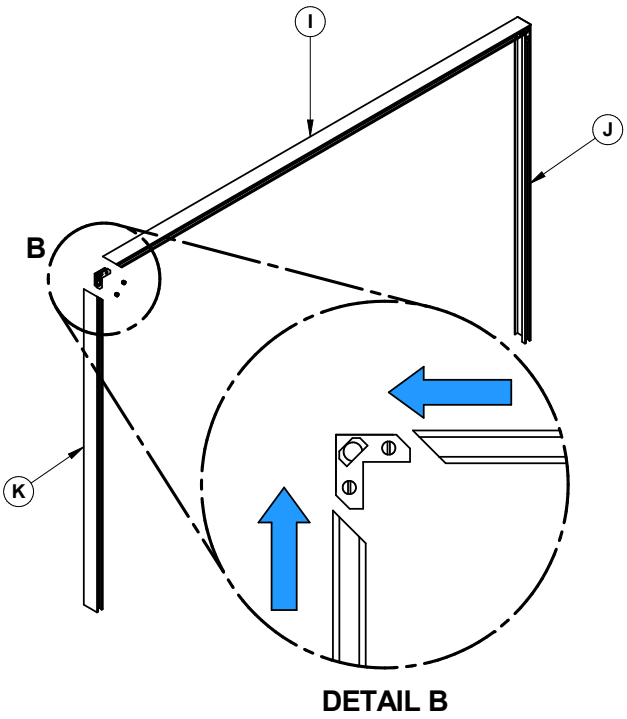

DETAIL B

4. Insert the superimposed brackets in the groove of each decorative trim **(I)**, **(J)** and **(K)**. Align the corners of the angled side of each trim, and then tighten the screws **(H)** to secure the trims.

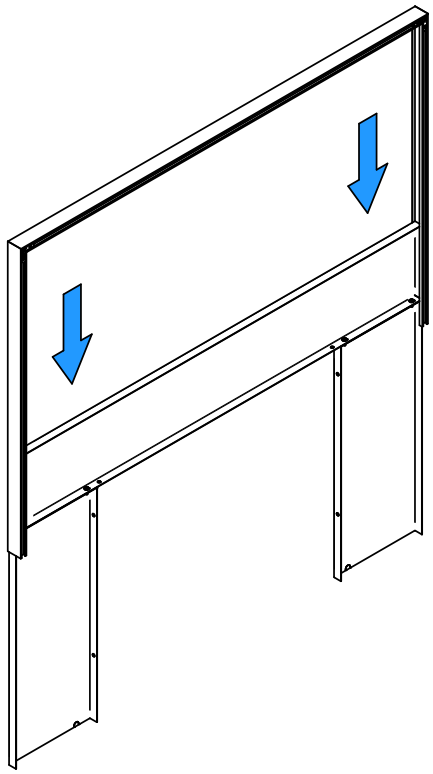

5. Align the trim assembly with the left and right edge of the faceplate and slowly slide it down over the faceplate.

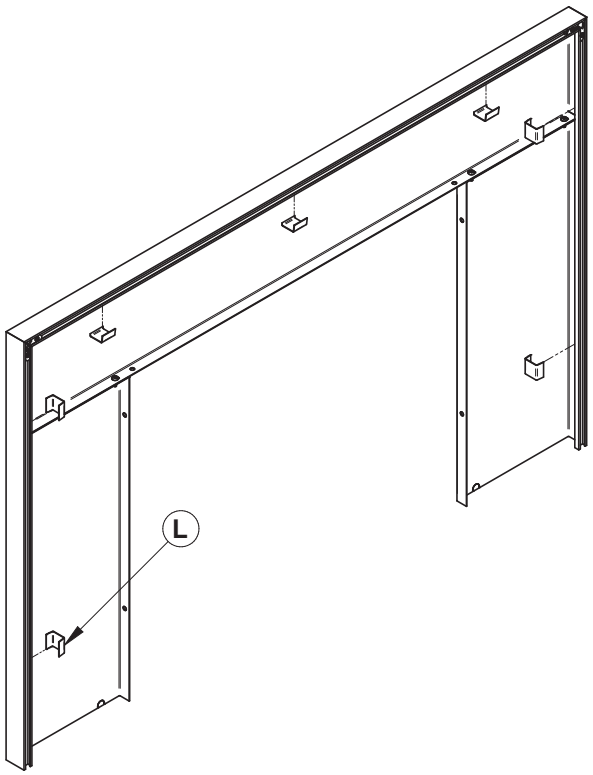

6. Secure the trim to the faceplate by squeezing the eight trim retainers **(L)** between the inner edge of the trim and the front of the faceplate.

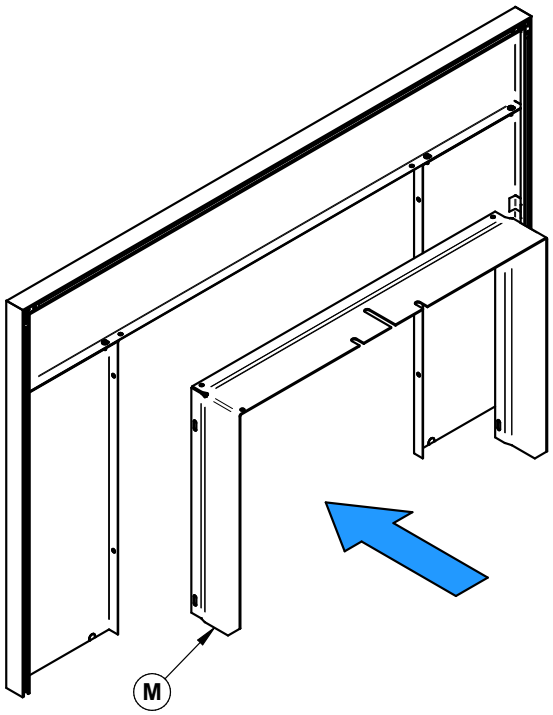

7. Align the holes in the faceplate extension **(M)** with the holes in each faceplate side panels.

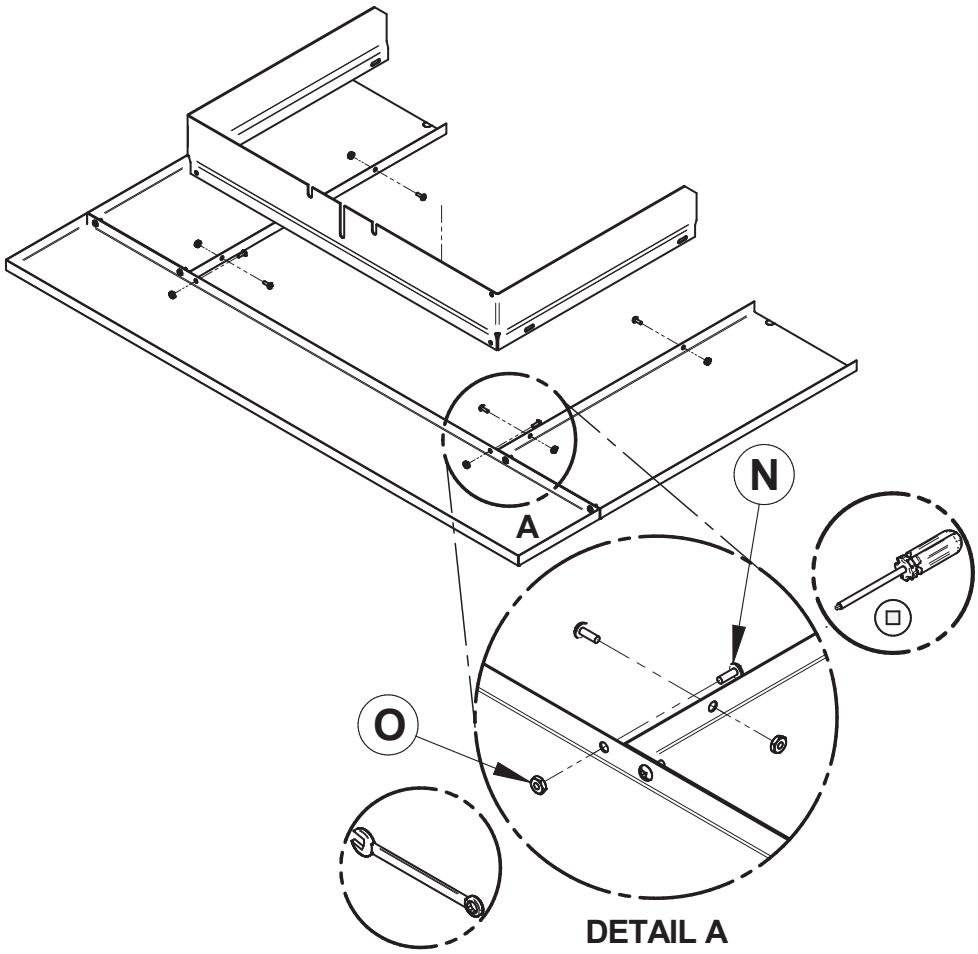

8. Secure both assemblies together using 6 bolts **(N)** and nuts **(O)** provided.

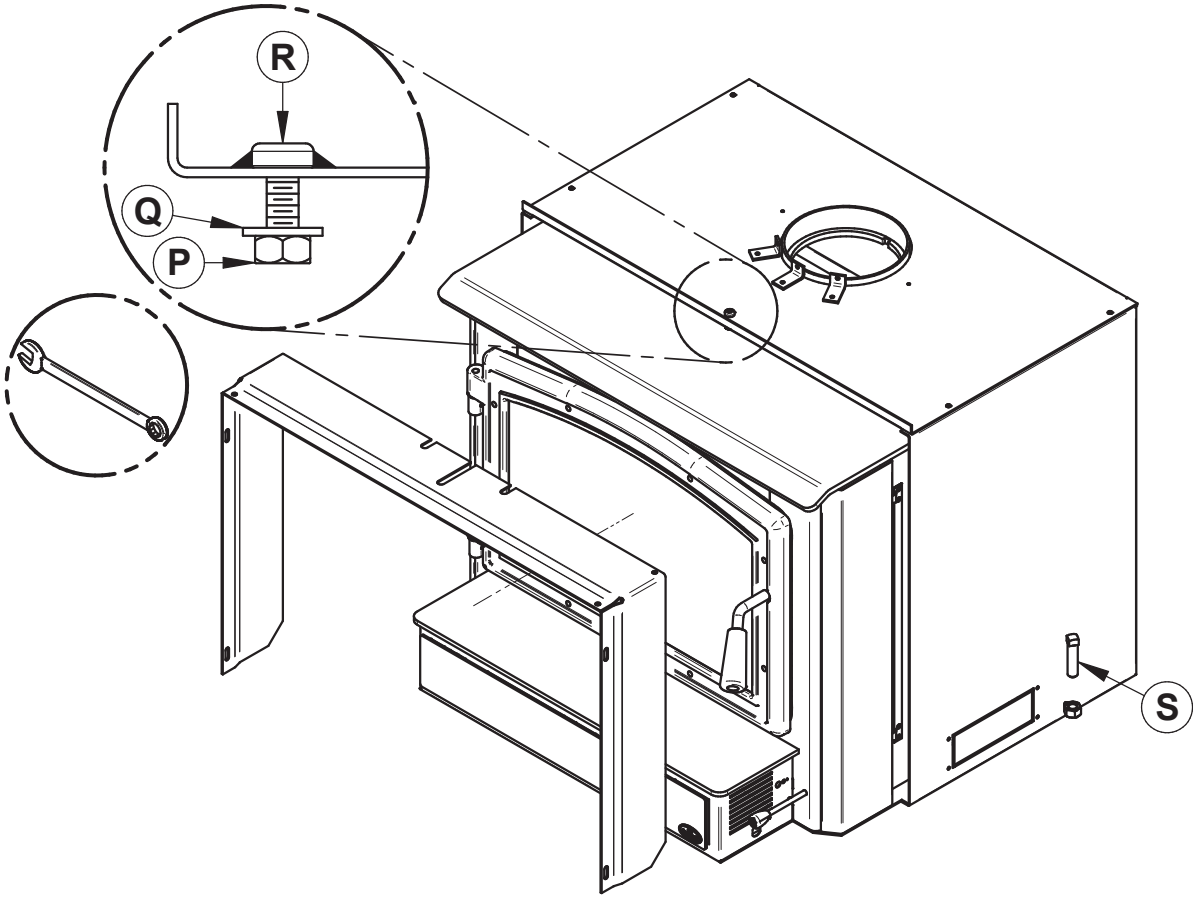

9. Center the insert into the fireplace opening.

   If necessary, adjust the height of the insert using the leveling bolts **(S)** *on each side of the convection air jacket until the faceplate is properly seated on the floor of the hearth extension.*

10. Align the notch in the faceplate extension with the bolt **(P)** welded to the air jacket located and slide the faceplate assembly just over the bolt's head and washer **(Q)**. Then push towards the fireplace.

11. Once the faceplate is in place, secure the assembly by tightening nuts **(R)** using a 7/16" (11 mm) open end wrench.

APPENDIX 5: LOG RETAINERS INSTALLATION

1.

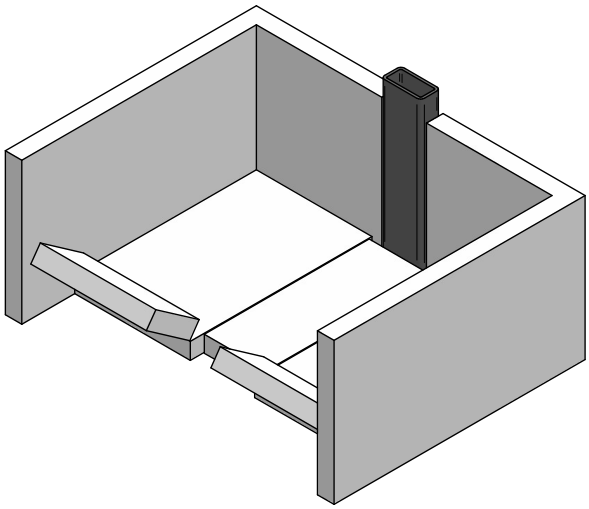

2.

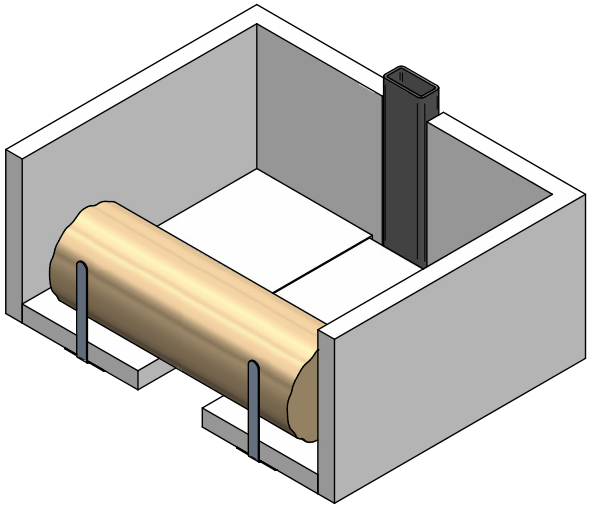

3.

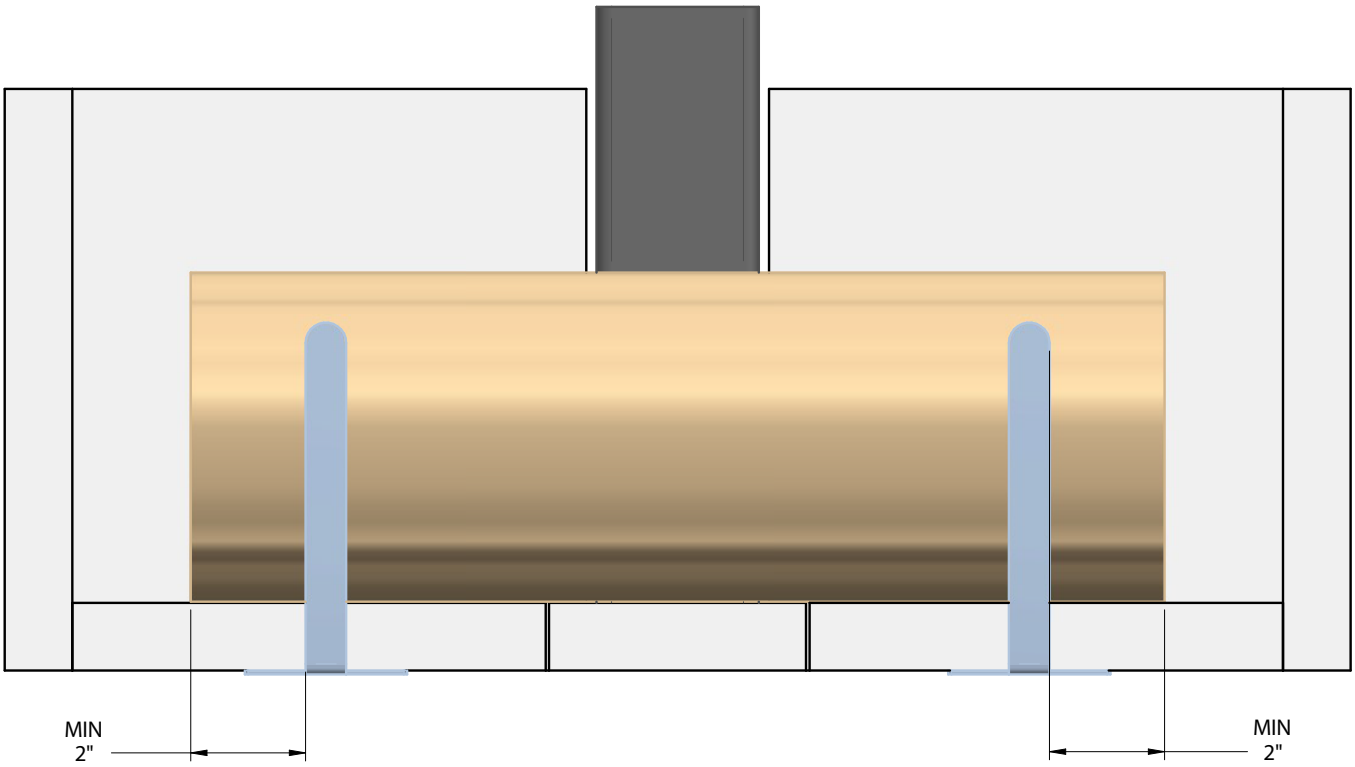

APPENDIX 6: OPTIONAL CUTTABLE FACEPLATE INSTALLATION

This 18G steel faceplate is cuttable to the desired shape of the fireplace opening if it contains irregular edges (e.g.: fieldstones). The use of a template may be useful prior to cutting of the faceplate.

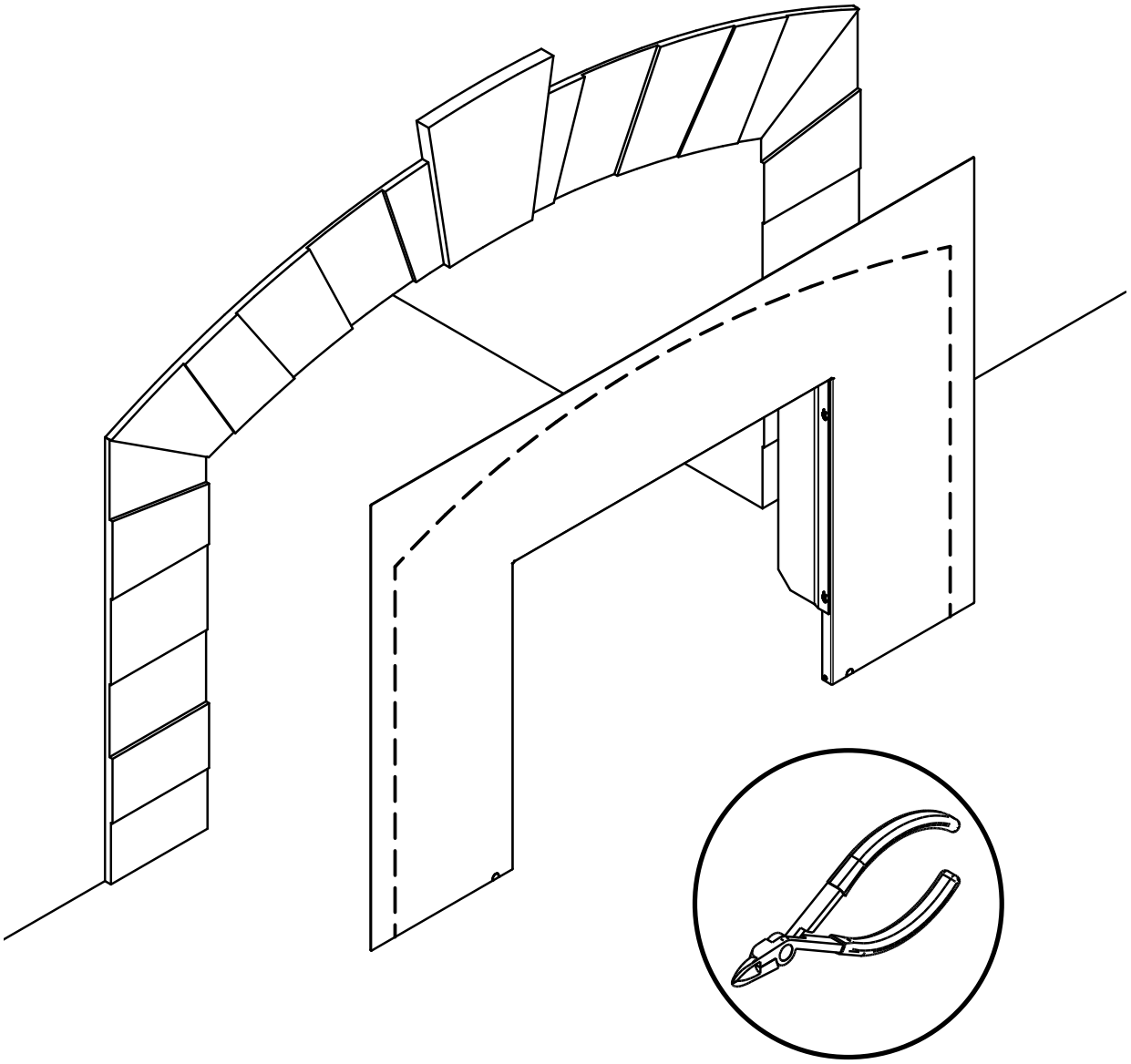

See the installation manual provided with the faceplate.

APPENDIX 7: OPTIONAL HEAT SHIELD INSTALLATION

When a heat shield is installed, you can reduce the clearances to the mantle shelf and the top surround, as shown. (Refer to section «8.3 Installation of a Combustible Mantel Shelf» for additional details)

ENGLISH

MAXIMUM MANTEL SHELF DIMENSION (X)	MANTEL SHELF CLEARANCES (I)
12" (305mm) max.	21" (533 mm) min.

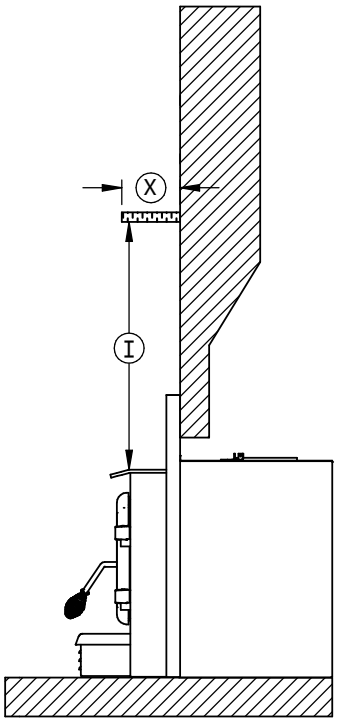

TOP SURROUND CLEARANCES (H)
21" (533 mm) min.

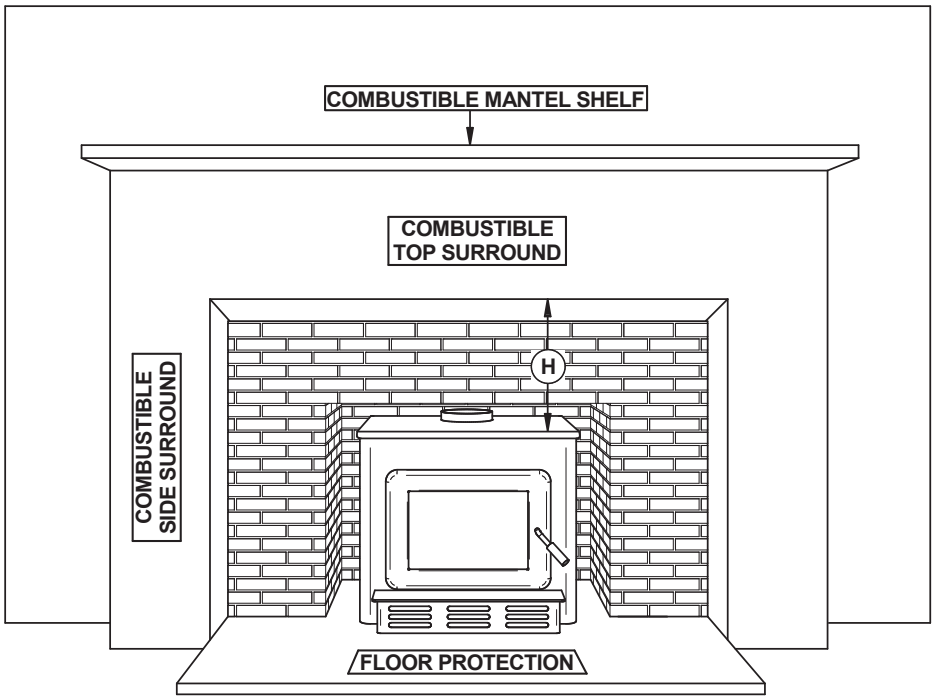

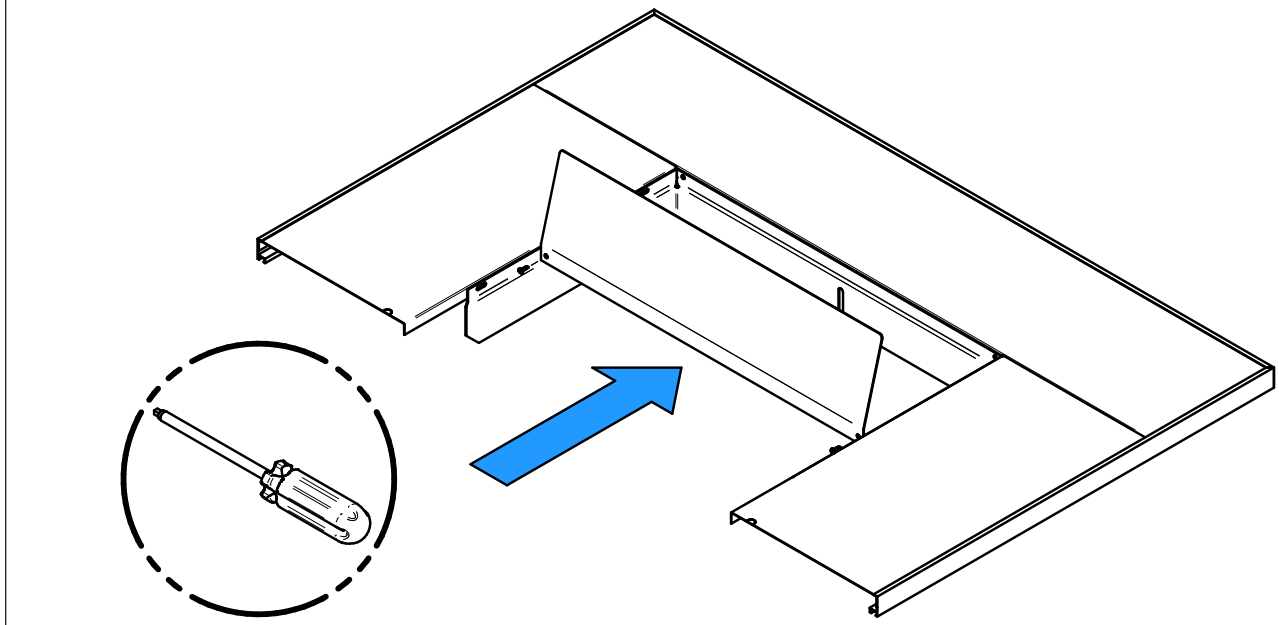

1. Install the heat shield on the faceplate (assembled with the faceplate extension) using 3 self-drilling screws included in the kit. The heat shield should be pointing upwards.

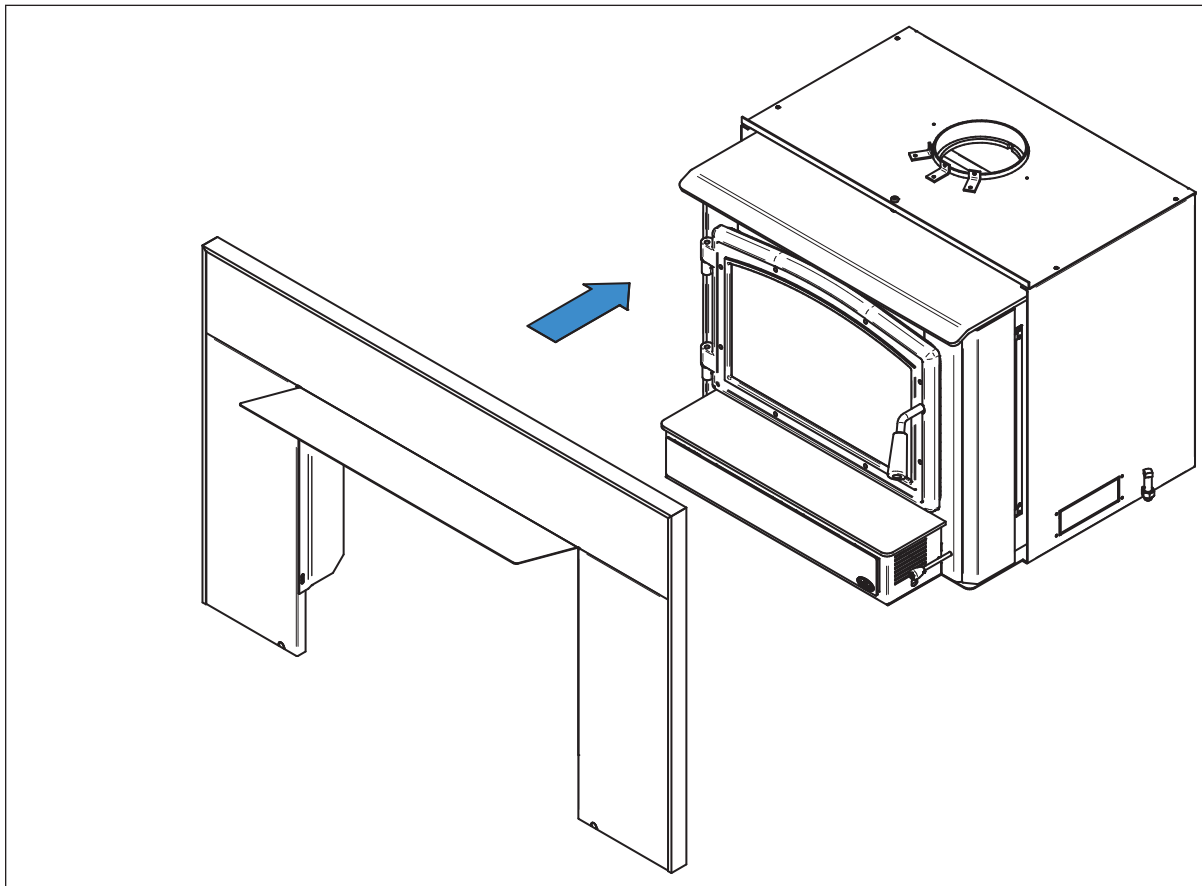

2. Once the heat shield is positioned, install the faceplate on the insert.

APPENDIX 8: OPTIONAL FIRE SCREEN INSTALLATION

In the United States or in provinces with a particulate emission limit (eg. US EPA), the use of wood stoves with the door open with a rigid firescreen is prohibited.

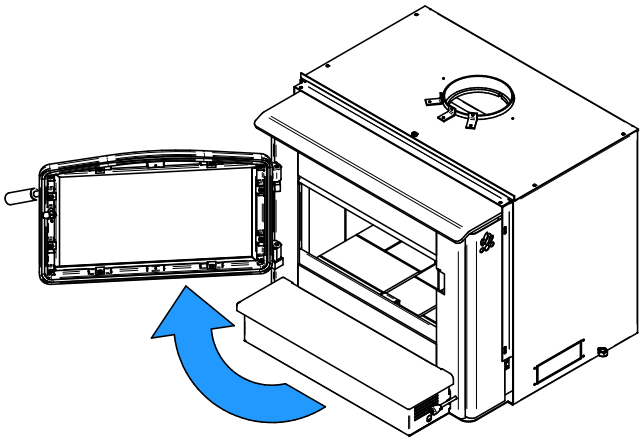

1. Open the door.

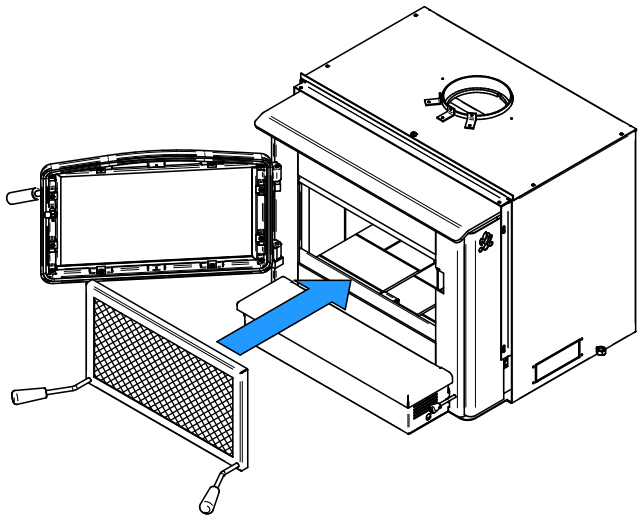

2. Hold the fire screen by the two handles and bring it close to the door opening.

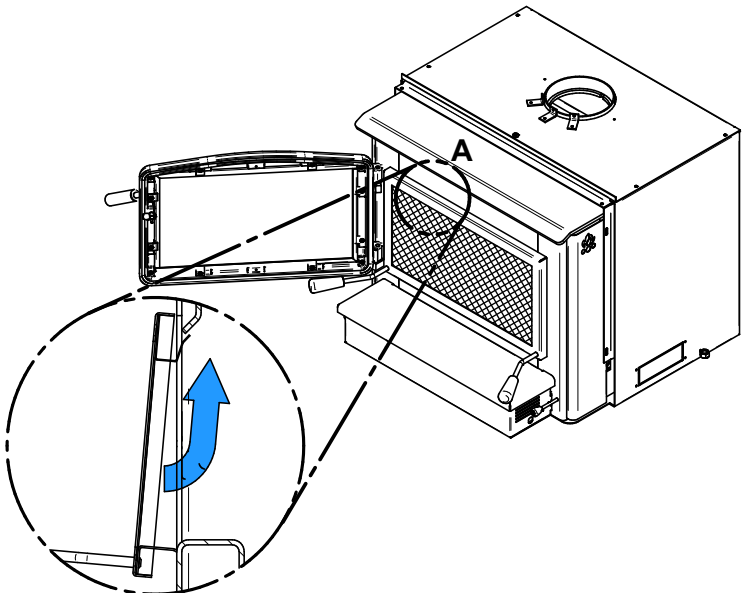

3. Lean the upper part of the fire screen against the top door opening making sure to insert the top fire screen brackets behind the primary air deflector.
4. Lift the fire screen upwards and push the bottom part towards the stove then let the fire screen rest on the bottom of the door opening.

Warning: Never leave the stove unattended while in use with the fire screen.

APPENDIX 9: INSTALLATION OF AIR TUBES AND BAFFLE

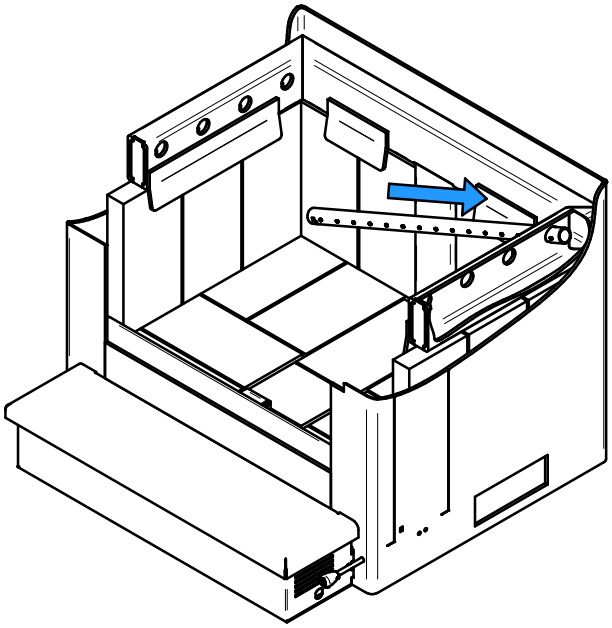

1. Starting with the rear tube, lean and insert the right end of the secondary air tube into the rear right channel hole. Then lift and insert the left end of the tube into the rear left channel.

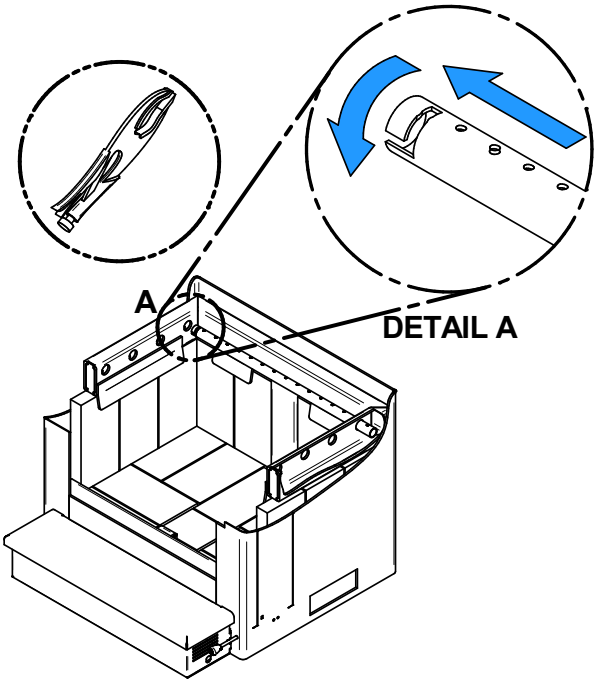

2. Align the notch in the left end of the tube with the key of the left air channel hole. Using a « Wise grip » hold the tube and lock it in place by turning the tube as shown in detail A . Make sure the notch reaches the end of the key way.
3. Repeat steps 1 and 2 for the two tubes in the back then install the baffle before installing the two front tubes.
4. To remove the tubes use the above steps in reverse order.

Note that secondary air tubes **(A)** *can be replaced without removing the baffle board* **(B)** *and that all tubes are identical.*

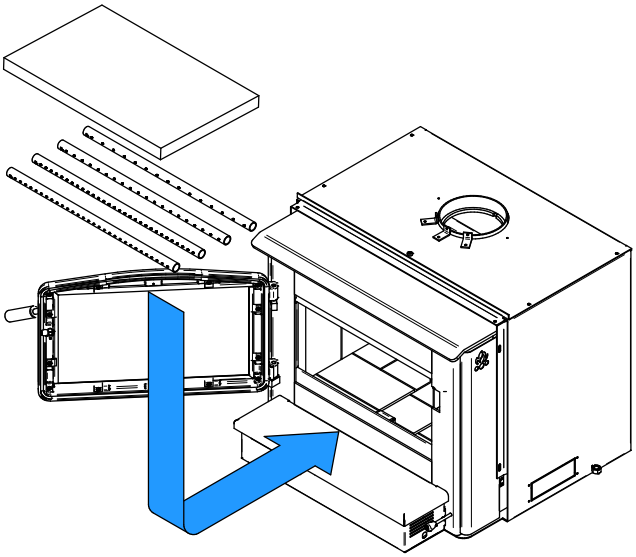

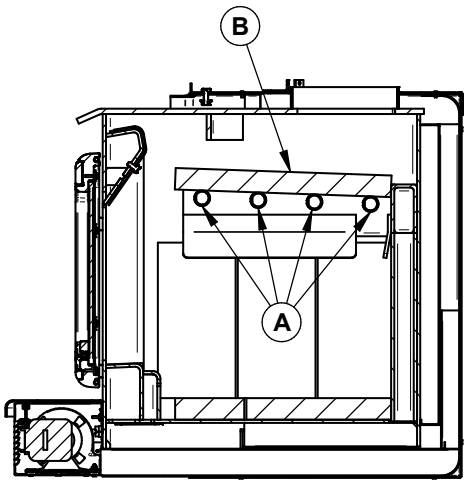

SECTION D-D

APPENDIX 10: REMOVAL INSTRUCTIONS

For inspecting purposes, your insert may need to be removed. To remove your insert follow these instructions:

1. Unscrew the faceplate fastener **(B)** holding the faceplate **(C)** on the insert.
2. Remove faceplate **(C)** by pulling on it.
3. Remove the blower assembly **(D)** by pulling on it.
4. Remove the three screws securing the pipe connector **(A)**.
5. Unscrew the bolts securing the insert to the floor on each side of the unit **(E)**.

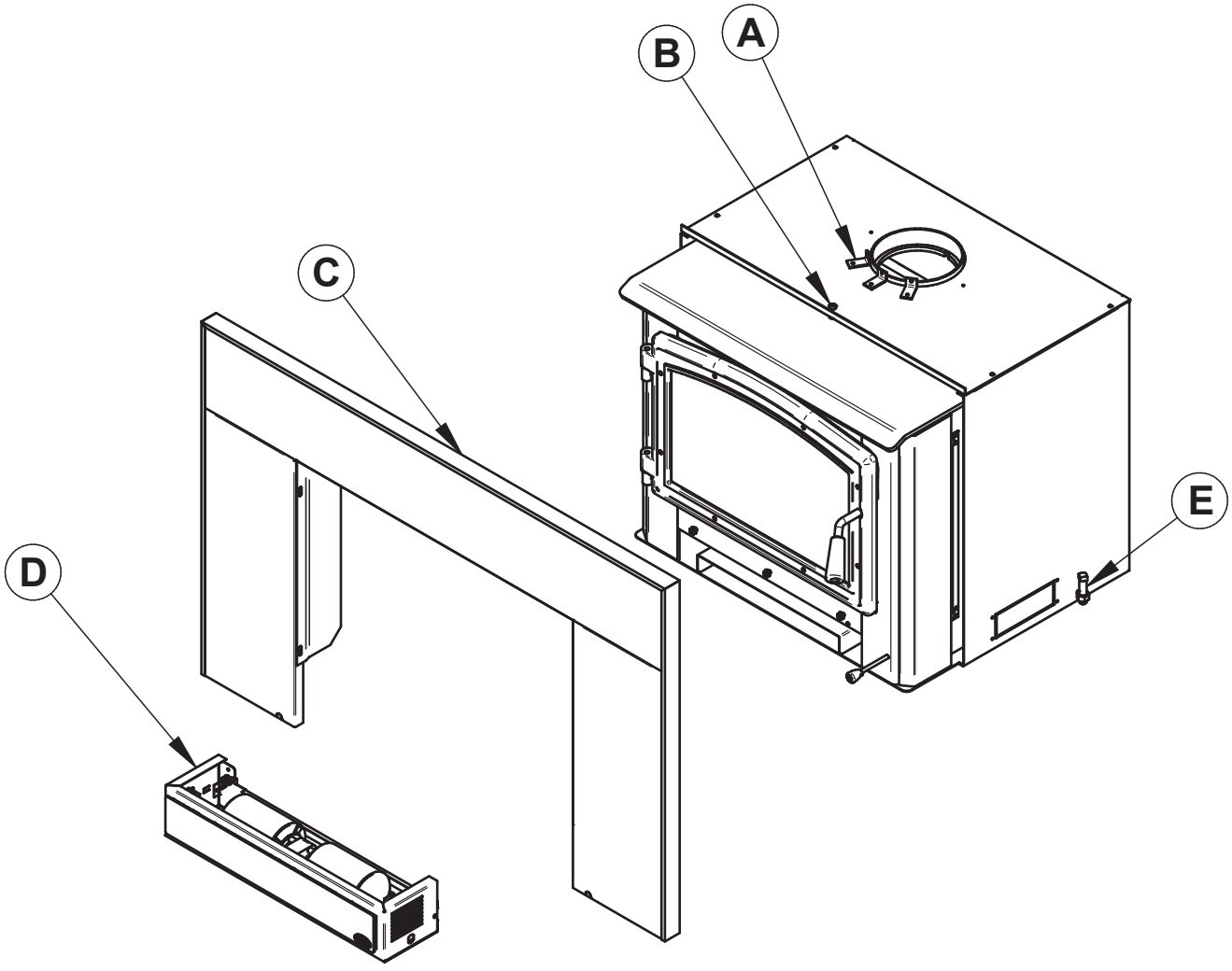

APPENDIX 11: EXPLODED DIAGRAM AND PARTS LIST

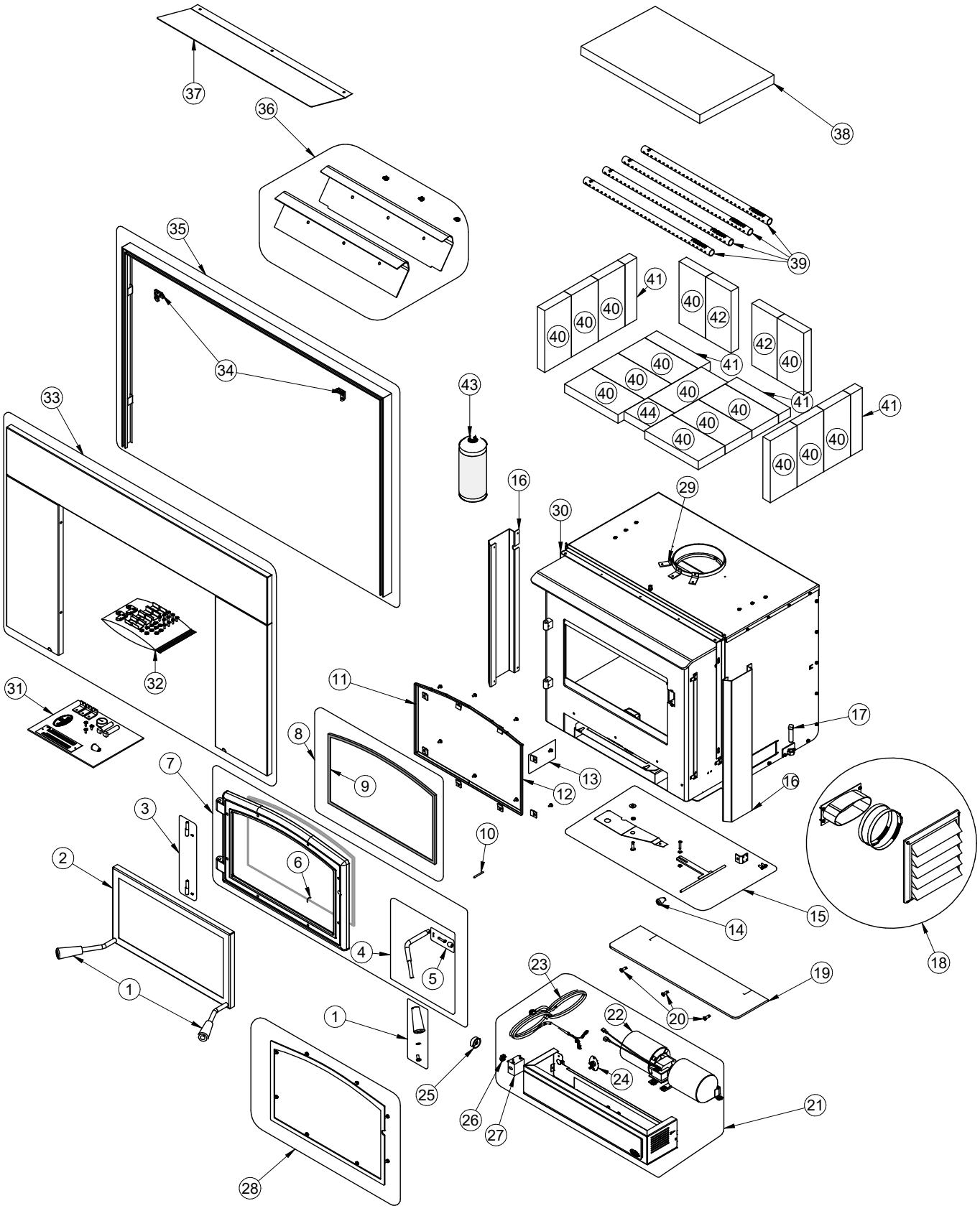

IMPORTANT: THIS IS DATED INFORMATION. When requesting service or replacement parts for your unit, please provide the model number and the serial number. We reserve the right to change parts due to technology upgrade or availability. Contact an authorized dealer to obtain any of these parts. Never use substitute materials. Use of non-approved parts can result in poor performance and safety hazards.

#	Item	Description	Qty
1	SE74166	HANDLE 30898 REPLACEMENT KIT	2
2	AC01315	RIGID FIRESCREEN	1
3	SE74167	DOOR HINGE REPLACEMENT KIT	1
4	SE65024	REPLACEMENT HANDLE WITH LATCH KIT	1
5	AC09185	DOOR LATCH KIT	1
6	AC06500	SILICONE AND 5/8" X 8' BLACK DOOR GASKET KIT	1
7	SE24285	CAST IRON DOOR WITH HANDLE AND GASKET	1
8	SE65025	ARCHED GLASS WITH GASKET 18" X 11-3/16"	1
9	AC06400	3/4" X 6' FLAT BLACK SELF-ADHESIVE GLASS GASKET	1
10	30101	SPRING TENSION PIN 5/32"Ø X 1 1/2"L	1
11	PL65010	LEFT GLASS FRAME	1
12	PL65009	RIGHT GLASS FRAME	1
13	SE53585	GLASS RETAINER KIT WITH SCREWS (12 PER KIT)	1
14	30102	1/4" CAST STEEL AIR CONTROL HANDLE WITH MOUNTING SCREW	1
15	SE74169	INSERT TRAP KIT	1
16	PL65061	RIGHT OR LEFT DECORATIVE SIDE PANEL	2
17	30337	SQUARE HEAD SET SCREW 1/2-13 X 1-3/4"	2
18	AC01298	5"Ø FRESH AIR INTAKE KIT	1
19	SE65055	ASH TRAY ASSEMBLY	1
20	30507	BLACK TORX SCREW WITH FLAT HEAD TYPE F 1/4-20 X 3/4"	3
21	SE74172	BLOWER ASSEMBLY	1
22	44089	DOUBLE CAGE BLOWER 144 CFM 115V - 60Hz - 1.1A	1
23	60013	POWER CORD 96" X 18-3 type SJT (50 pcs per carton)	1
24	44028	CERAMIC THERMODISC F110-20F	1
25	44085	RHEOSTAT KNOB	1
26	44087	RHEOSTAT NUT	1
27	44080	RHEOSTAT WITHOUT NUT (MODEL KBMS-13BV)	1
28	OA10237	BLACK DOOR OVERLAY	1
28	OA10238	BRUSHED NICKEL DOOR OVERLAY	1
29	PL34052	LINER FIXATION BRACKET	1
30	PL53869	FACEPLATE EXTENSION	1
31	SE45927	OSBURN 2000 INSERT INSTRUCTIONS MANUEL KIT	1
32	SE15097	FACEPLATE HARDWARE KIT	1
33	AC03410	REGULAR FACEPLATE (29" X 44")	1
33	AC03411	LARGE FACEPLATE (32" X 50")	1

#	Item	Description	Qty
34	30456	AMS HARDWARE KIT (TAPPED CORNERS AND BACK PLATES)	2
35	OA10128	BLACK LARGE FACEPLATE TRIMS (32" X 50")	1
35	OA10123	BRUSHED NICKEL FACEPLATE TRIMS (29" X 44")	1
35	OA10122	BLACK FACEPLATE TRIMS (29" X 44")	1
35	OA10129	BRUSHED NICKEL LARGE FACEPLATE TRIMS (32" X 50")	1
36	SE65505	TOP AIR DEFLECTOR PROTECTOR KIT	1
37	AC01317	7 3/16" X 26" HEAT SHIELD FOR SURROUND/SHELF	1
38	21389	C-CAST BAFFLE 20" X 12 1/2" X 1 1/4"	1
39	PL65514	SECONDARY AIR TUBE	4
40	29020	4 1/2" X 9" X 1 1/4" REFRACTORY BRICK HD	15
41	PL36056	2" X 9" 1 1/4" REFRACTORY BRICK HD	4
42	PL36636	4 1/4" X 9" X 1 1/4" REFRACTORY BRICK HD	2
43	AC05959	METALLIC BLACK STOVE PAINT - 342 g (12oz) AEROSOL	1
44	PL36084	4" X 4 1/2" X 1 1/4" REFRACTORY BRICK HD	1
45	PL65505	TOP AIR DEFLECTOR PROTECTOR	1
46	PL36056	2" X 9" 1 1/4" REFRACTORY BRICK	4
47	29020	4 1/2" X 9"X 1 1/4" REFRACTORY BRICK HD	15
48	PL36084	4" X 4 1/2" X 1 1/4" REFRACTORY BRICK	1
49	PL36636	REFRACTORY BRICK 4 1/4" X 9” X 1 1/4” HD	2
50	PL65514	SECONDARY AIR TUBE	4
51	21389	C-CAST BAFFLE 20" X 12 1/2" X 1 1/4"	1

OSBURN LIMITED LIFETIME WARRANTY

The warranty of the manufacturer extends only to the original retail purchaser and is not transferable. This warranty covers brand new products only, which have not been altered, modified nor repaired since shipment from factory. Proof of purchase (dated bill of sale), model name and serial number must be supplied when making any warranty claim to your OSBURN dealer.

This warranty applies to normal residential use only. This warranty is void if the unit is used to burn material other than cordwood (for which the unit is not certified by EPA) and void if not operated according to the owner's manual. Damages caused by misuse, abuse, improper installation, lack of maintenance, over firing, negligence or accident during transportation, power failures, downdrafts, venting problems or under-estimated heating area are not covered by this warranty. The recommended heated area for a given appliance is defined by the manufacturer as its capacity to maintain a minimum acceptable temperature in the designated area in case of a power failure.

This warranty does not cover any scratch, corrosion, distortion, or discoloration. Any defect or damage caused by the use of unauthorized or other than original parts voids this warranty. An authorized qualified technician must perform the installation in accordance with the instructions supplied with this product and all local and national building codes. Any service call related to an improper installation is not covered by this warranty.

The manufacturer may require that defective products be returned or that digital pictures be provided to support the claim. Returned products are to be shipped prepaid to the manufacturer for investigation. Transportation fees to ship the product back to the purchaser will be paid by the manufacturer. Repair work covered by the warranty, executed at the purchaser's domicile by an authorized qualified technician requires the prior approval of the manufacturer. All parts and labour costs covered by this warranty are limited according to the table below.

The manufacturer, at its discretion, may decide to repair or replace any part or unit after inspection and investigation of the defect. The manufacturer may, at its discretion, fully discharge all obligations with respect to this warranty by refunding the wholesale price of any warranted but defective parts. The manufacturer shall, in no event, be responsible for any uncommon, indirect, consequential damages of any nature, which are in excess of the original purchase price of the product. **A one-time replacement limit applies to all parts benefiting from lifetime coverage**. This warranty applies to products purchased after June 1st, 2015.

DESCRIPTION	WARRANTY APPLICATION*	
	PARTS	LABOUR
Combustion chamber (welds only) and cast iron door frame	Lifetime***	5 years
Ceramic glass**, plating (manufacturing defect**), and convector air-mate	Lifetime***	N/A
Surrounds, heat shields, ash drawer, steel legs, pedestal, trims (aluminum extrusions), vermiculite, *C-Cast* or equivalent baffle**, secondary air tubes**, removable stainless steel combustion chamber, deflectors, and supports	7 years***	N/A
Handle assembly, glass retainers and air control mechanism	5 years	3 years
Removable carbon steel combustion chamber components	5 years	N/A
Standard and optional blower, heat sensors, switches, rheostat, wiring, and electronics	2 years	1 year
Paint (peeling**), gaskets, insulation, ceramic fiber blankets, refractory bricks (fireplace only***), and other options	1 year	N/A
All parts replaced under the warranty	90 days	N/A

Subject to limitations above** **Picture required** ***limited to one replacement

Labour cost and repair work to the account of the manufacturer are based on a predetermined rate schedule and must not exceed the wholesale price of the replacement part.

Shall your unit or a components be defective, contact immediately your **OSBURN** dealer. To accelerate processing of your warranty claim, make sure to have on hand the following information when calling:

- Your name, address and telephone number
- Bill of sale and dealer's name
- Installation configuration
- Serial number and model name as indicated on the nameplate fixed to the back of your unit
- Nature of the defect and any relevant information

Before shipping your unit or defective component to our plant, you must obtain an Authorization Number from your OSBURN dealer. Any merchandise shipped to our plant without authorization will be refused automatically and returned to sender.

This document is available for free download on the manufacturer's website. It is a copyrighted document. Resale is strictly prohibited. The manufacturer may update this document from time to time and cannot be responsible for problems, injuries, or damages arising out of the use of information contained in any document obtained from unauthorized sources.

Stove Builder International inc.
250, rue de Copenhague,
St-Augustin-de-Desmaures (Québec) Canada
G3A 2H3
1-877-356-6663
www.osburn-mfg.com/en
tech@sbi-international.com